Copystar

CS 255
CS 305

SERVICE MANUAL

Published in January 2011
2K3SM942
Rev.2

CAUTION

RISK OF EXPLOSION IF BATTERY IS REPLACED BY AN INCORRECT TYPE. DISPOSE OF USED BATTERIES ACCORDING TO THE INSTRUCTIONS.

It may be illegal to dispose of this battery into the municipal waste stream. Check with your local solid waste officials for details in your area for proper disposal.

ATTENTION

IL Y A UN RISQUE D’EXPLOSION SI LA BATTERIE EST REMPLACEE PAR UN MODELE DE TYPE INCORRECT. METTRE AU REBUT LES BATTERIES UTILISEES SELON LES INSTRUCTIONS DONNEES.

Il peut être illégal de jeter les batteries dans des eaux d’égout municipales. Vérifiez avec les fonctionnaires municipaux de votre région pour les détails concernant des déchets solides et une mise au rebut appropriée.

Revision history

Revision	Date	Replaced pages	Remarks
1	17 December 2010	CONTENTS, 1-1-1 to 1-1-4, 1-1-8, 1-2-8, 1-2-9, 1-2-12, 1-2-13, 1-3-1, 1-3-2, 1-3-12, 1-3-35, 1-3-60, 1-3-61, 1-3-63, 1-3-84, 1-4-6, 1-4-20, 1-5-8, 1-5-32, 2-3-23, 2-3-26, 2-4-4	
2	24 January 2011	1-3-71	

This page is intentionally left blank.

Safety precautions

This booklet provides safety warnings and precautions for our service personnel to ensure the safety of their customers, their machines as well as themselves during maintenance activities. Service personnel are advised to read this booklet carefully to familiarize themselves with the warnings and precautions described here before engaging in maintenance activities.

Safety warnings and precautions

Various symbols are used to protect our service personnel and customers from physical danger and to prevent damage to their property. These symbols are described below:

⚠**DANGER:** High risk of serious bodily injury or death may result from insufficient attention to or incorrect compliance with warning messages using this symbol.

⚠**WARNING:** Serious bodily injury or death may result from insufficient attention to or incorrect compliance with warning messages using this symbol.

⚠**CAUTION:** Bodily injury or damage to property may result from insufficient attention to or incorrect compliance with warning messages using this symbol.

Symbols

The triangle (△) symbol indicates a warning including danger and caution. The specific point of attention is shown inside the symbol.

 General warning.  Warning of risk of electric shock.

 Warning of high temperature.

⃠ indicates a prohibited action. The specific prohibition is shown inside the symbol.

 General prohibited action.  Disassembly prohibited.

● indicates that action is required. The specific action required is shown inside the symbol.

 General action required.  Remove the power plug from the wall outlet.

 Always ground the copier.

1. Installation Precautions

WARNING

- Do not use a power supply with a voltage other than that specified. Avoid multiple connections to one outlet: they may cause fire or electric shock. When using an extension cable, always check that it is adequate for the rated current. .....
- Connect the ground wire to a suitable grounding point. Not grounding the copier may cause fire or electric shock. Connecting the earth wire to an object not approved for the purpose may cause explosion or electric shock. Never connect the ground cable to any of the following: gas pipes, lightning rods, ground cables for telephone lines and water pipes or faucets not approved by the proper authorities. .....

CAUTION:

- Do not place the copier on an infirm or angled surface: the copier may tip over, causing injury. .....
- Do not install the copier in a humid or dusty place. This may cause fire or electric shock. .....
- Do not install the copier near a radiator, heater, other heat source or near flammable material. This may cause fire. .....
- Allow sufficient space around the copier to allow the ventilation grills to keep the machine as cool as possible. Insufficient ventilation may cause heat buildup and poor copying performance. .....
- Always handle the machine by the correct locations when moving it. .....
- Always use anti-toppling and locking devices on copiers so equipped. Failure to do this may cause the copier to move unexpectedly or topple, leading to injury. .....
- Avoid inhaling toner or developer excessively. Protect the eyes. If toner or developer is accidentally ingested, drink a lot of water to dilute it in the stomach and obtain medical attention immediately. If it gets into the eyes, rinse immediately with copious amounts of water and obtain medical attention. .....
- Advice customers that they must always follow the safety warnings and precautions in the copier's instruction handbook. .....

2. Precautions for Maintenance

WARNING

- Always remove the power plug from the wall outlet before starting machine disassembly. .....
- Always follow the procedures for maintenance described in the service manual and other related brochures. .....
- Under no circumstances attempt to bypass or disable safety features including safety mechanisms and protective circuits. .....
- Always use parts having the correct specifications. .....
- Always use the thermostat or thermal fuse specified in the service manual or other related brochure when replacing them. Using a piece of wire, for example, could lead to fire or other serious accident. .....
- When the service manual or other serious brochure specifies a distance or gap for installation of a part, always use the correct scale and measure carefully. .....
- Always check that the copier is correctly connected to an outlet with a ground connection. .....
- Check that the power cable covering is free of damage. Check that the power plug is dust-free. If it is dirty, clean it to remove the risk of fire or electric shock. .....
- Never attempt to disassemble the optical unit in machines using lasers. Leaking laser light may damage eyesight. .....
- Handle the charger sections with care. They are charged to high potentials and may cause electric shock if handled improperly. .....

CAUTION

- Wear safe clothing. If wearing loose clothing or accessories such as ties, make sure they are safely secured so they will not be caught in rotating sections. .....
- Use utmost caution when working on a powered machine. Keep away from chains and belts. .....
- Handle the fixing section with care to avoid burns as it can be extremely hot. .....
- Check that the fixing unit thermistor, heat and press rollers are clean. Dirt on them can cause abnormally high temperatures. .....

- Do not remove the ozone filter, if any, from the copier except for routine replacement. .....
- Do not pull on the AC power cord or connector wires on high-voltage components when removing them; always hold the plug itself. .....
- Do not route the power cable where it may be stood on or trapped. If necessary, protect it with a cable cover or other appropriate item. .....
- Treat the ends of the wire carefully when installing a new charger wire to avoid electric leaks. .....
- Remove toner completely from electronic components. .....
- Run wire harnesses carefully so that wires will not be trapped or damaged. .....
- After maintenance, always check that all the parts, screws, connectors and wires that were removed, have been refitted correctly. Special attention should be paid to any forgotten connector, trapped wire and missing screws. .....
- Check that all the caution labels that should be present on the machine according to the instruction handbook are clean and not peeling. Replace with new ones if necessary. .....
- Handle greases and solvents with care by following the instructions below: .....
  · Use only a small amount of solvent at a time, being careful not to spill. Wipe spills off completely.
  · Ventilate the room well while using grease or solvents.
  · Allow applied solvents to evaporate completely before refitting the covers or turning the power switch on.
  · Always wash hands afterwards.
- Never dispose of toner or toner bottles in fire. Toner may cause sparks when exposed directly to fire in a furnace, etc. .....
- Should smoke be seen coming from the copier, remove the power plug from the wall outlet immediately. .....

3. Miscellaneous

WARNING

- Never attempt to heat the drum or expose it to any organic solvents such as alcohol, other than the specified refiner; it may generate toxic gas. .....

This page is intentionally left blank.

CONTENTS

1-5 Assembly and disassembly

1-6 Requirements on PWB Replacement

2-1 Mechanical Construction

2-2 Electrical Parts Layout

2-3 Operation of the PWBs

2-4 Appendixes

Installation Guide

1-1-1 Specifications

Machine

Item		Specifications	
		25ppm	30ppm
Type		Desktop	
Printing method		Electrophotography by semiconductor laser, single drum system	
Originals		Sheet, Book, 3-dimensional objects (maximum original size: Folio/Legal)	
Original feed system		Fixed	
Paper weight	Cassette	60 to 163 g/m² (Duplex: 52 to 163 g/m²)	
	MP tray	45 to 256 g/m², (Sizes is larger than A4/Letter: 52 to 163 g/m²)	
Paper type	Cassette	Plain, Recycled, Preprinted, Bond, Color (Colour), Letterhead, Thick, High quality, Custom 1 to 8 (Duplex: Same as simplex)	
	MP tray	Plain, Vellum, Recycled, Preprinted, Bond, Cardstock, Color (Colour), Letterhead, Thick, Envelope, Coated, High quality, Custom 1 to 8	
Paper size	Cassette	A3, A4, A5, A6, B5, Ledger, Letter, Legal, Statement, Executive, Oficio II, Folio, 16K,Envelope C5, Custom	
	MP tray	A3, A4, A5, A6, B5, ISO B5, B6, Ledger, Letter, Legal, Statement, Executive, Oficio II, Folio, 16K, Envelope #10, Envelope #9, Envelope #6, Envelope Monarch, Envelope DL, Envelope C5, Postcards, Return postcard, Youkei 2, Youkei 4, Custom	
Zoom level		Manual mode : (When using the DP) 25 to 200%, 1% increments (When the DP is not used) 25 to 400%, 1% increments Auto mode : 400%, 200%, 141%, 122%, 115%, 86%, 81%, 70%, 50%, 25%	
Copying speed	Simplex	A4/Letter : 25 sheets/min A4/LetterR : 18 sheets/min A3/Ledger : 12 sheets/min B4/Legal : 12 sheets/min B5 : 25 sheets/min B5R : 16 sheets/min A5R : 12 sheets/min A6R : 12 sheets/min	A4/Letter : 30 sheets/min A4/LetterR : 22 sheets/min A3/Ledger : 15 sheets/min B4/Legal : 15 sheets/min B5 : 30 sheets/min B5R : 20 sheets/min A5R : 15 sheets/min A6R : 15 sheets/min
	Duplex	A4/Letter : 19 sheets/min A4/LetterR : 13 sheets/min A3/Ledger : 9 sheets/min B4/Legal : 9 sheets/min B5 : 19 sheets/min B5R : 13 sheets/min A5R : 9 sheets/min	A4/Letter : 24 sheets/min A4/LetterR : 16 sheets/min A3/Ledger : 12 sheets/min B4/Legal : 12 sheets/min B5 : 24 sheets/min B5R : 16 sheets/min A5R : 12 sheets/min
First copy time (A4, feed from cassette)		When using the DP : 9.2 s or less When the DP is not used : 7.8 s or less	
Warm-up time (22 °C/71.6 °F, 60% RH)		Power on : 20 s or less Sleep mode : 20 s or less	

Item		Specifications	
		25ppm	30ppm
Paper capacity	Cassette	500 sheets (80g/m²)	
	MP tray	100 sheets (80 g/m², plain paper, A4/Letter or less)	
Output tray capacity		250 sheets (80g/m²)	
Continuous copying		1 to 999 sheets	
Light source		White LED	
Scanning system		Flat bed scanning by CCD image sensor	
Photoconductor		a-Si drum (diameter 30 mm)	
Image write system		Semiconductor laser:	
Charging system		Contact charger roller method	
Developer system		Mono component dry developing method Toner replenishing: Automatic from the toner container	
Transfer system		Transfer roller method	
Separation system		Small diameter separation, dischager brush	
Cleaning system		Counter blade cleaning + cleaning roller	
Charge erasing system		Exposure by cleaning lamp (LED)	
Fusing system		Heat and pressure fusing with the heat roller and the press roller Heat source: halogen heater Abnormally high temperature protection devices: thermostat	
CPU		PowerPC464 (800MHz)	
Main memory	Standard	512 MB	
	Maximum	1536 MB	
Interface	Standard	USB interface connector: 1 (USB 2.0) USB host: 2 (USB 2.0) Network interface: 1 (10BASE-T/100BASE-TX/1000BASE)	
	Option	eKUIO slot: 2	
Resolution		600 × 600 dpi	
Operating environment	Temperature	10 to 32.5 °C/50 to 90.5 °F	
	Humidity	15 to 80% RH	
	Altitude	2,500 m/8,202 ft or less	
	Brightness	1,500 lux or less	
Dimensions (W × D × H)		with DP : 590 × 590 × 694 mm / 23 1/4” × 23 1/4 “× 27 5/16” with original cover: 590 × 590 × 586.5 mm / 23 1/4” × 23 1/4 “× 23 1/16”	
Weight (with toner container)		with DP : 52.2 kg / 115.1 lb with original cover: 46.5kg / 102.5 lb	
Space required (W × D)		878 × 590 mm / 34 9/16” × 23 1/4” (using MP tray)	
Power source		120 V AC, 60 Hz, more than 12.0 A 220 - 240 V AC, 50/60 Hz, more than 6.5 A	
Options		Paper feeder (single cassette), Paper feeder (double cassette), Document finisher, Network kit, Fax kit, Expanded memory, USB Keyboard	

Document processor *1

Item	Specifications
Original feed method	Automatic feed
Supported original types	Sheet originals
Original sizes	Maximum: A3/Ledger Minimum : A5/Statement
Original weights	Simplex: 45 to 160 g/m^2 Duplex : 50 to 120 g/m^2
Loading capacity	50 sheets (50 to 80 g/m^2) or less
Dimensions (W × D × H)	590 × 489 × 123 mm / 23 1/4” × 19 1/4” × 4 13/16”
Weight	7 kg / 15.4 lb or less

*1 Only model with document processor as standard

Printer

Item	Specifications
Printing speed	Same as copying speed.
First print time (A4, feed from cassette)	8.0 s or less
Resolution	600 dpi
Operating system	Windows 2000, Windows XP, Windows XP Professional, Windows Server 2003, Windows Server 2003 x64 Edition, Windows Vista x86 Edition, Windows Vista x64 Edition, Windows 7 x86 Edition, Windows 7 x64 Edition, Windows Server 2008, Windows Server 2008 x64 Edition, Apple Macintosh OS 10.x
Interface	USB interface connector: 1 (USB 2.0) USB host: 2 (USB 2.0) Network interface: 1 (10BASE-T/100BASE-TX/1000BASE)
Page description language	PRESCRIBE

Scanner

Item		Specifications
Operating system		Windows 2000 (Service Pack 4), Windows XP, Windows Vista, Windows 7, Windows Server 2003, Windows Server 2008
System requirements		IBM PC/AT compatible CPU: Celeron 600 MHz or higher RAM: 128 MB or more HDD free space: 20 MB or more Interface: Ethernet
Resolution		600 dpi, 400 dpi, 300 dpi, 200 dpi, 200 × 100dpi, 200 × 400dpi
File format		JPEG, TIFF, PDF, XPS
Scanning speed	**Simplex**	B/W : 40 images/min Color: 20 images/min (A4 landscape,300 dpi, Image quality: Text/Photo original)
	Duplex	B/W : 14 images/min Color: 9 images/min (A4 landscape, 300 dpi, Image quality: Text/Photo original)
Interface		Ethernet (10 BASE-T/100 BASE-TX/1000BASE) USB2.0 (Hi-Speed USB)
Network protocol		TCP/IP
Transmission system		PC transmission SMB Scan to SMB FTP Scan to FTP, FTP over SSL E-mail transmission SNTP Scan to E-mail TWAIN scan*1 WIA scan*2

*1 Available operating system: Windows 2000 (Service Pack 4), Windows XP, Windows Vista, Windows Server 2008, Windows 7

*2 Available operating system: Windows Vista, Windows Server 2008, Windows 7

NOTE: These specifications are subject to change without notice.

1-1-2 Parts names

(1) Machine (front side)

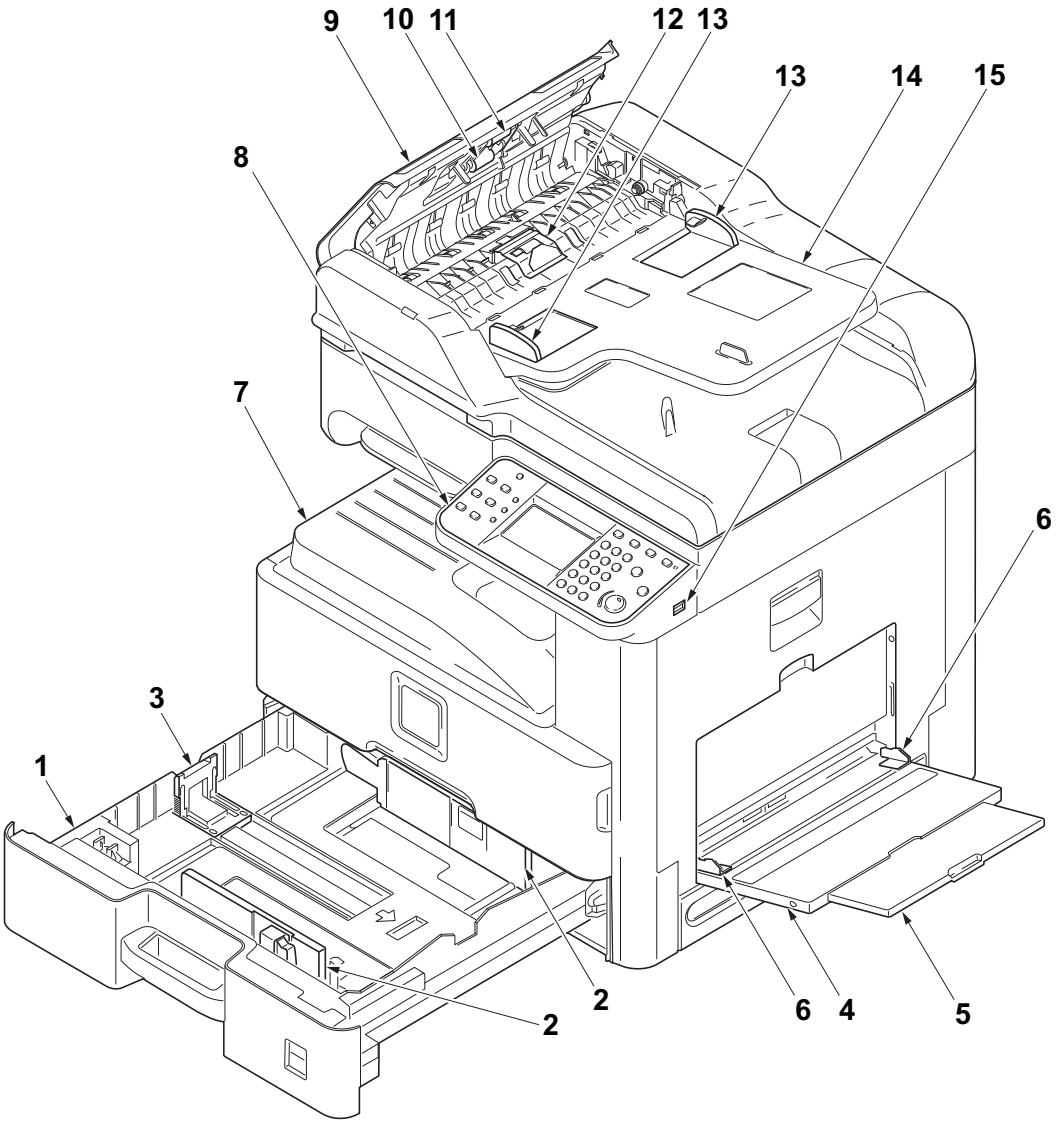

Figure 1-1-1

1. Cassette
2. Paper width guides
3. Paper length guide
4. MP (multi purpose) tray
5. MP tray extension
6. MP Paper width guides
7. Inner tray
8. Operation panel
9. DP top cover *1
10. DP paper feed roller *1
11. DP forwarding roller *1
12. DP separation pully *1
13. DP original width guides *1
14. Original table *1
15. USB memory slot

*1 : Only Model with Document Processor as standard

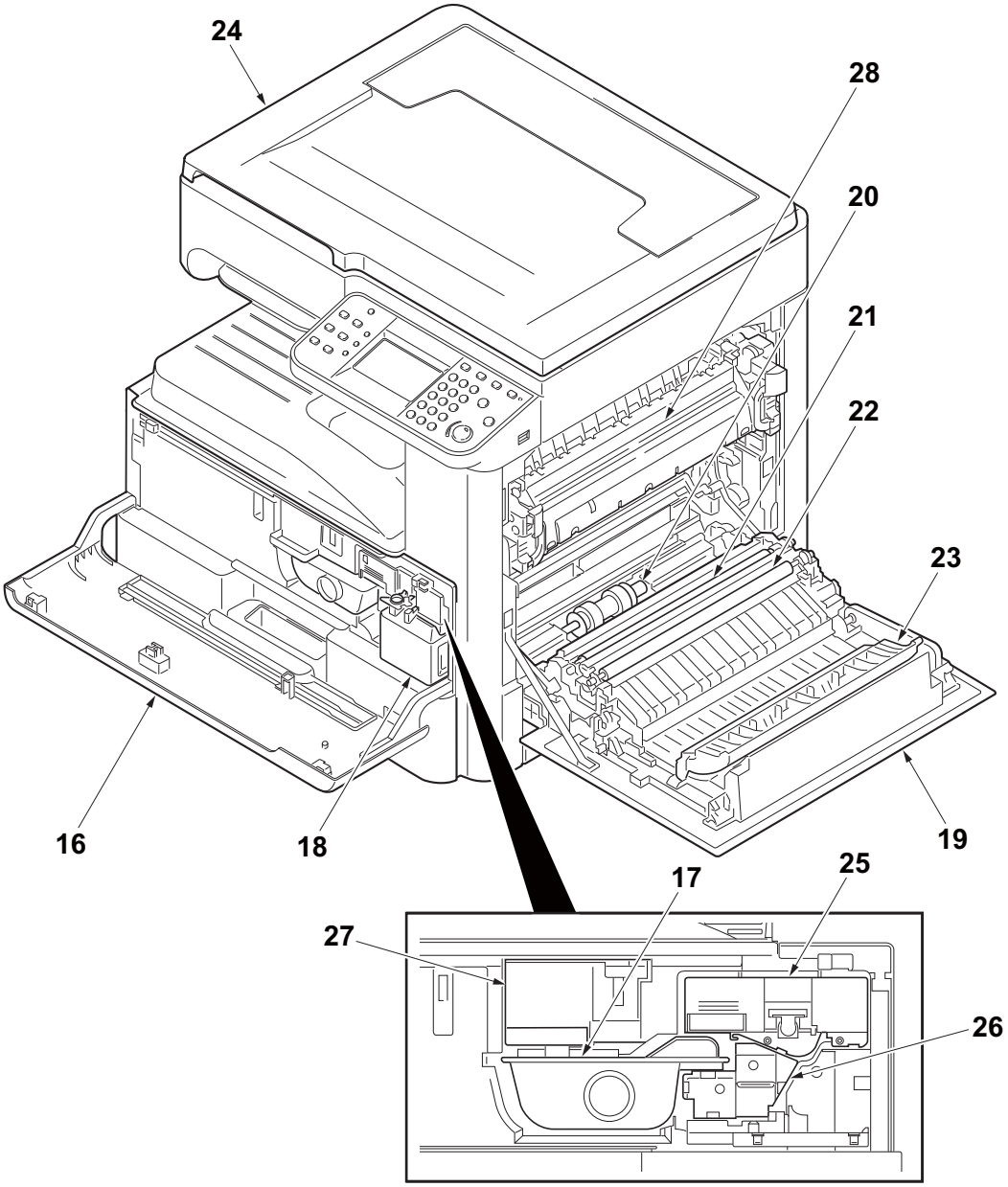

Figure 1-1-2

16. Front cover
17. Toner container
18. Waste toner box
19. Right cover 1
20. MP paper feed roller
21. Registration roller
22. Transfer roller
23. Feed shift guide
24. Original cover *2
25. Drum unit
26. Developing unit
27. Toner container lever
28. Fuser unit

*2 : Only Model with original cover as standard

(2) Machine (rear side)

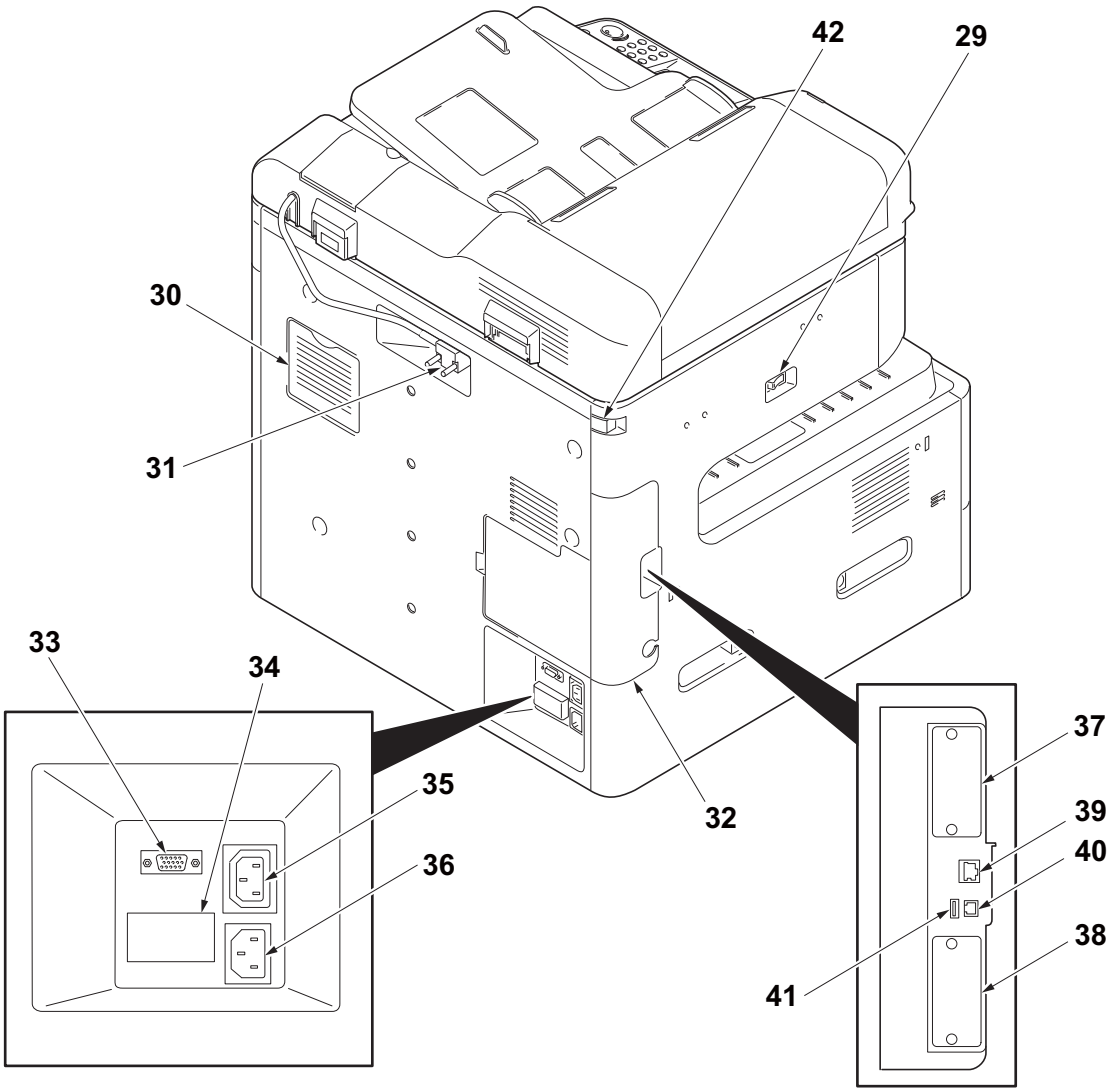

Figure 1-1-3

29. Main power switch
30. Filter cover
31. DP interface connector
32. Controller box cover
33. DF interface connector
34. Cassette heater switch (cover)
35. Outlet connector
36. Inlet connector
37. Option interface slot 1
38. Option interface slot 2
39. Network interface connector
40. USB port
41. USB interface connector
42. Scanner lock lever

(3) Operation panel

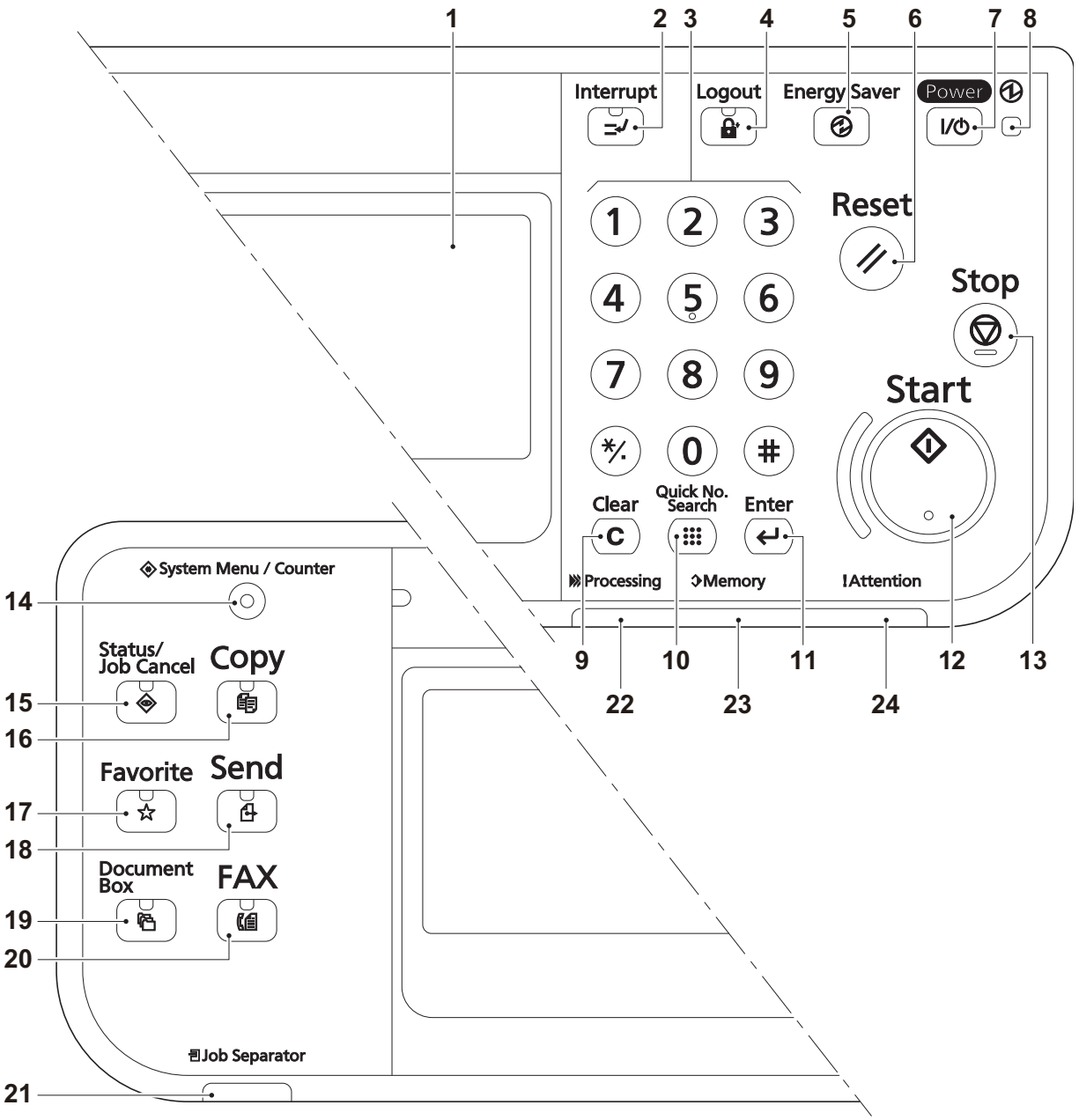

Figure 1-1-4

1. Message display
2. Interrupt key / LED
3. Numeric keys
4. Logout key / LED
5. Energy saver / LED
6. Reset key
7. Power key / LED
8. Main power LED
9. Clear key
10. Quick No.search key
11. Enter key
12. Start key / LED
13. Stop key
14. System menu/Counter key / LED
15. Status/Job cancel / LED
16. Copy key / LED
17. Favorite key / LED
18. Send key / LED
19. Document box key / LED
20. FAX key / LED
21. Job separator LED
22. Processing LED
23. Memory LED
24. Attention LED

1-1-3 Machine cross section

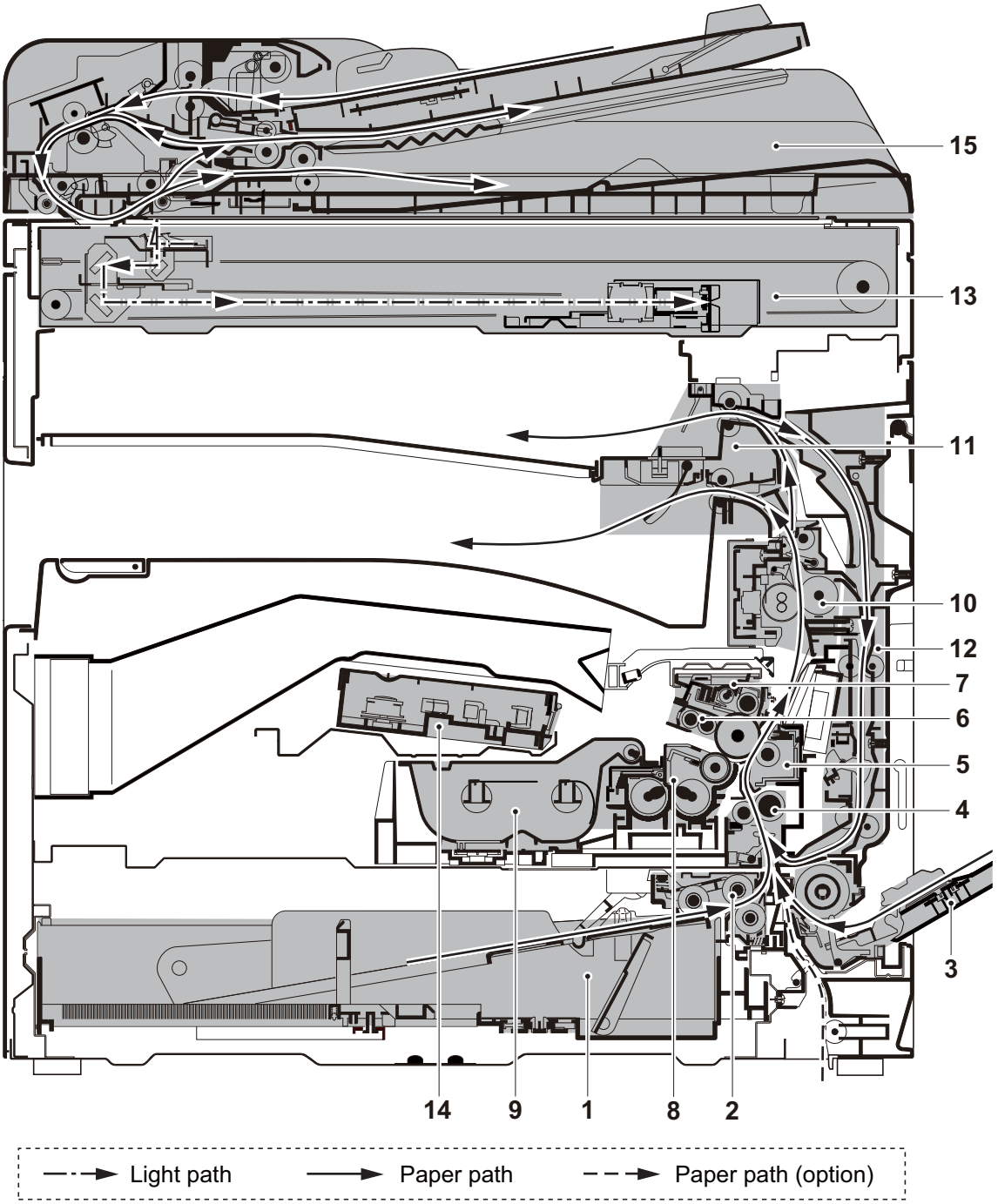

Figure 1-1-5

1. Cassette
2. Cassette paper feed section
3. MP tray paper feed section
4. Conveying section
5. Transfer/Separation section
6. Charger roller unit
7. Drum unit
8. Developer unit
9. Toner container
10. Fuser unit
11. Eject section
12. Duplex/conveyning section
13. Image scanner unit (ISU)
14. Laser scanner unit (LSU)
15. Document processor (DP) *3

*3 : Model with Document Processor as standard

This page is intentionally left blank.

1-2-1 Installation environment

1. Temperature: 10 to 32.5°C/50 to 90.5°F
2. Humidity: 15 to 80% RH
3. Power supply: 120 V AC, 12.0 A
   220 - 240 V AC, 6.5 A
4. Power supply frequency: 50 Hz ±2%/60 Hz ±2%
5. Installation location
   Avoid direct sunlight or bright lighting. Ensure that the photoconductor will not be exposed to direct sunlight or other strong light when removing paper jams.
   Avoid locations subject to high temperature and high humidity or low temperature and low humidity; an abrupt change in the environmental temperature; and cool or hot, direct air.
   Avoid places subject to dust and vibrations.
   Choose a surface capable of supporting the weight of the machine.
   Place the machine on a level surface (maximum allowance inclination: 1°).
   Avoid air-borne substances that may adversely affect the machine or degrade the photoconductor, such as mercury, acidic of alkaline vapors, inorganic gasses, NOx, SOx gases and chlorine-based organic solvents.
   Select a well-ventilated location.
6. Allow sufficient access for proper operation and maintenance of the machine.

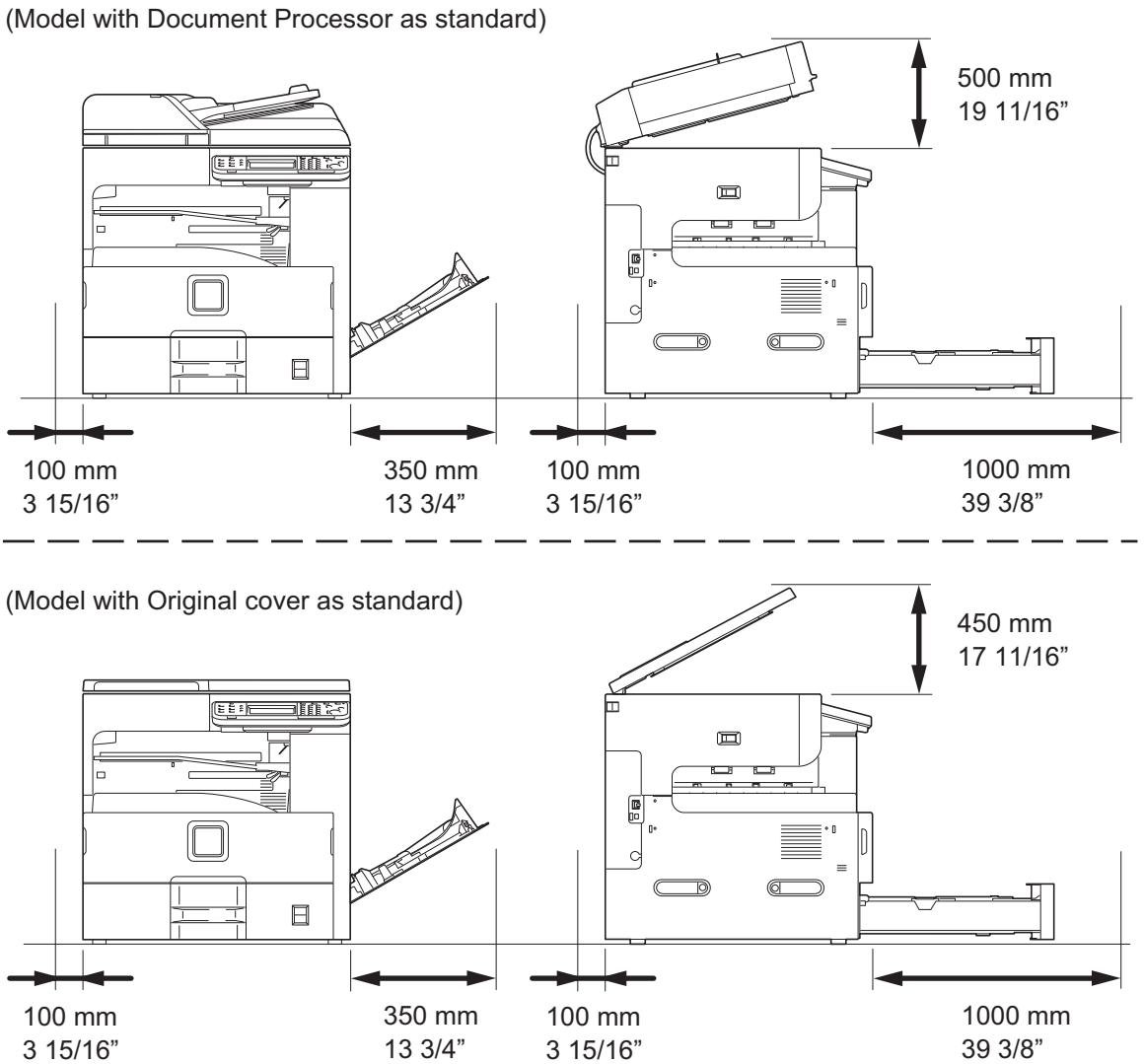

Figure 1-2-1

1-2-2 Unpacking and installation

(1) Installation procedure

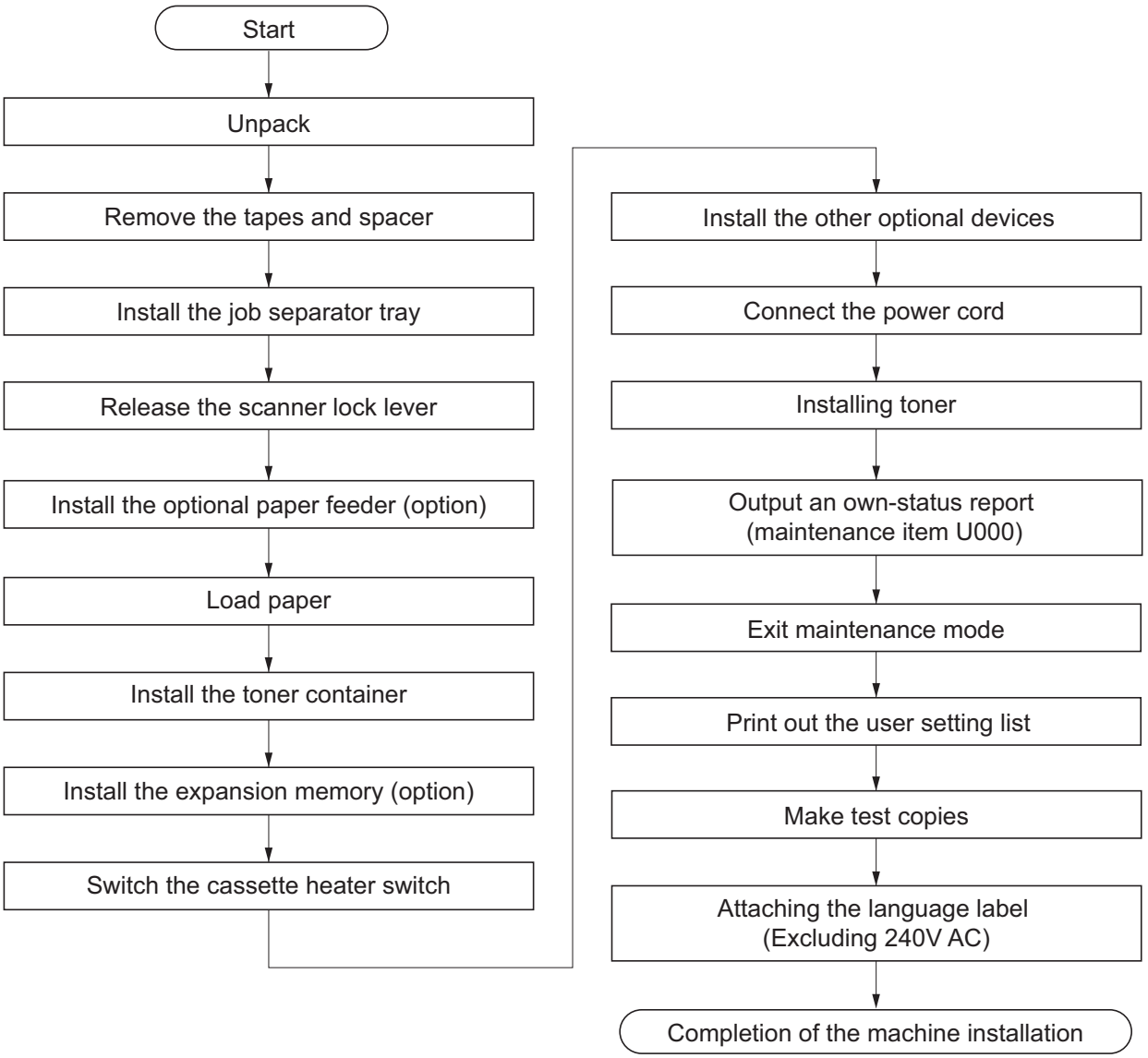

Unpacking

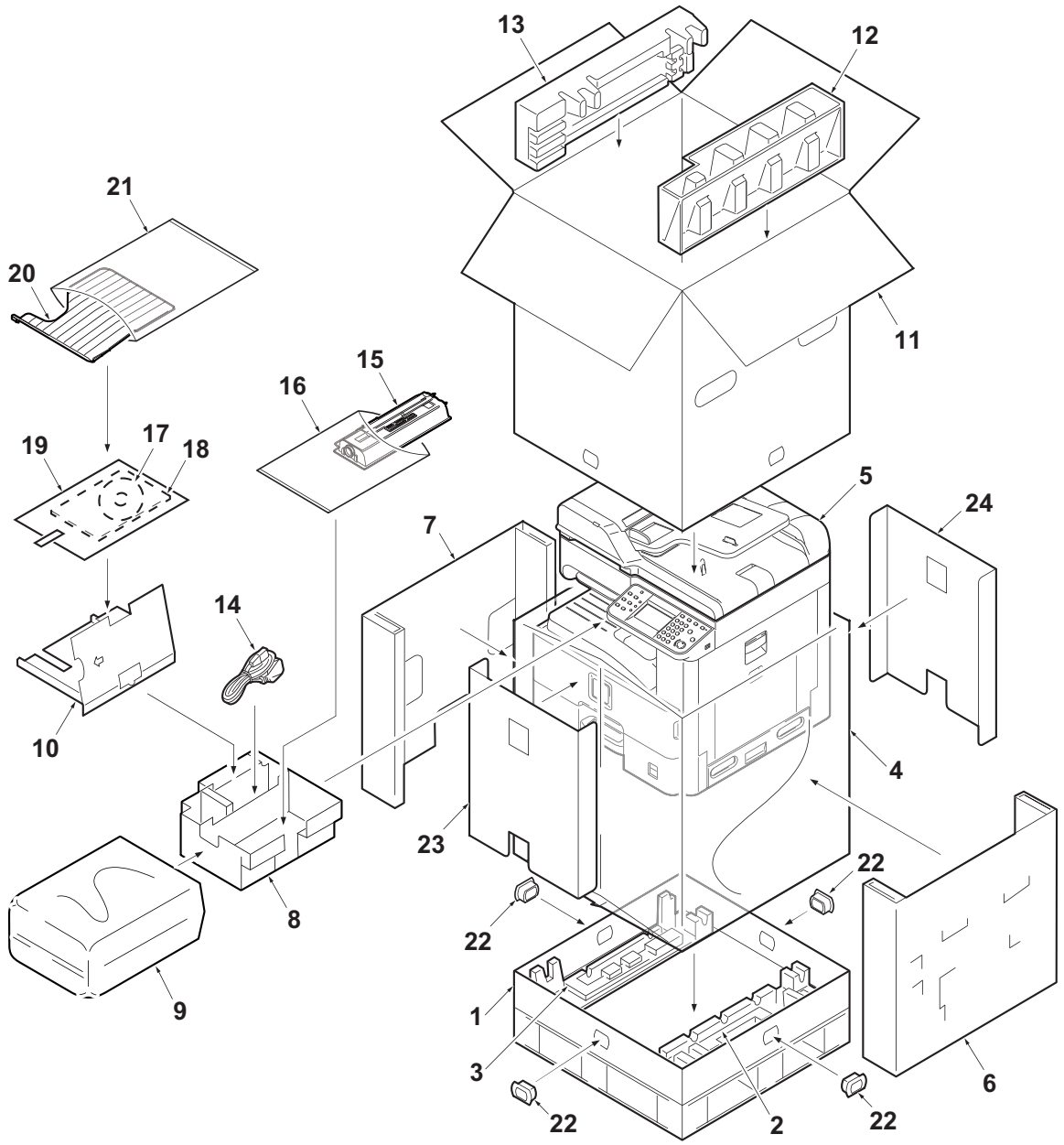

Figure 1-2-2

1. Bottom case
2. Bottom pad R
3. Bottom pad L
4. Machine cover (740 × 700)
5. Machine
6. Inner case R
7. Inner case L
8. Spacer A
9. Plastic bag (630 × 730)
10. Spacer B
11. Outer case
12. Upper pad R
13. Upper pad L
14. Power cord
15. Toner container
16. Plastic bag (400 × 600)
17. CD-ROM *1
18. Installation guide, etc.
19. Plastic bag
20. Job separator tray
21. Plastic bag (400 × 600)
22. Hinge joints
23. Inner case F
24. Inner case B

*1 Excluding 230V AC model

Place the machine on a level surface.

Remove the tapes and spacer

(Model with Document Processor as standard)

1. Remove four tapes.

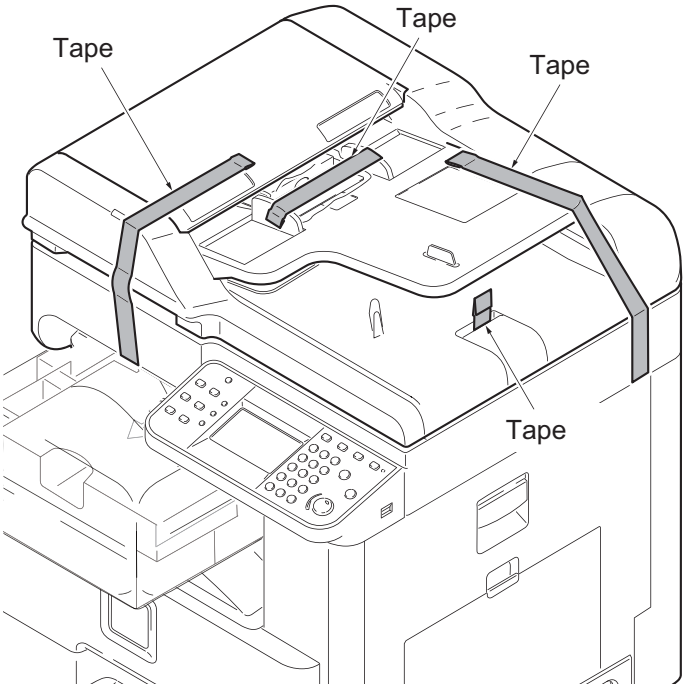

Figure 1-2-3

2. Open the DP top cover.
3. Slide two DP original width guides and then remove the pad.
4. Close the DP top cover.

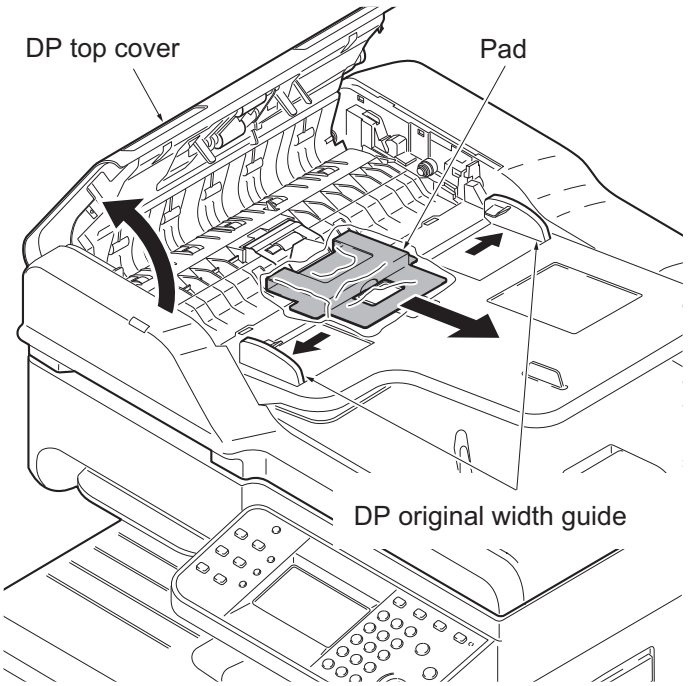

Figure 1-2-4

5. Open the DP.
6. Remove the protective sheet and paper.

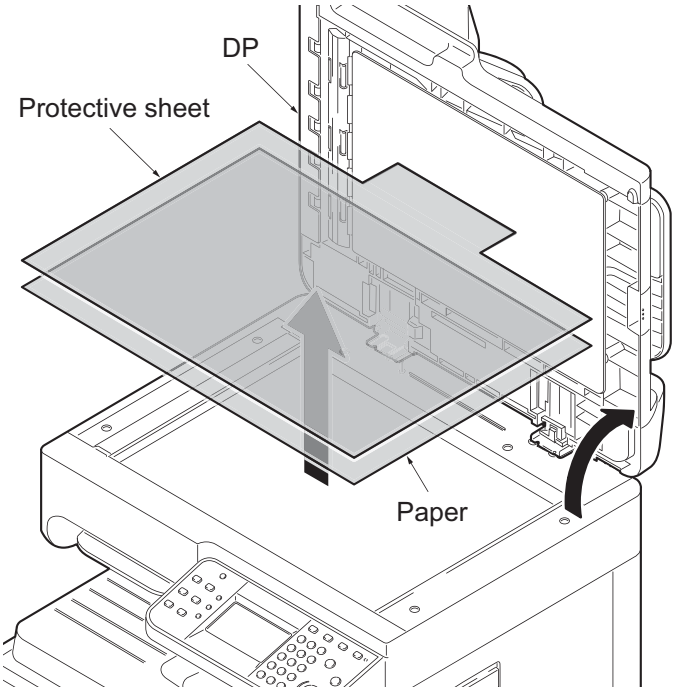

Figure 1-2-5

(Model with Original cover as standard)

1. Open the original cover.
2. Remove the paper.

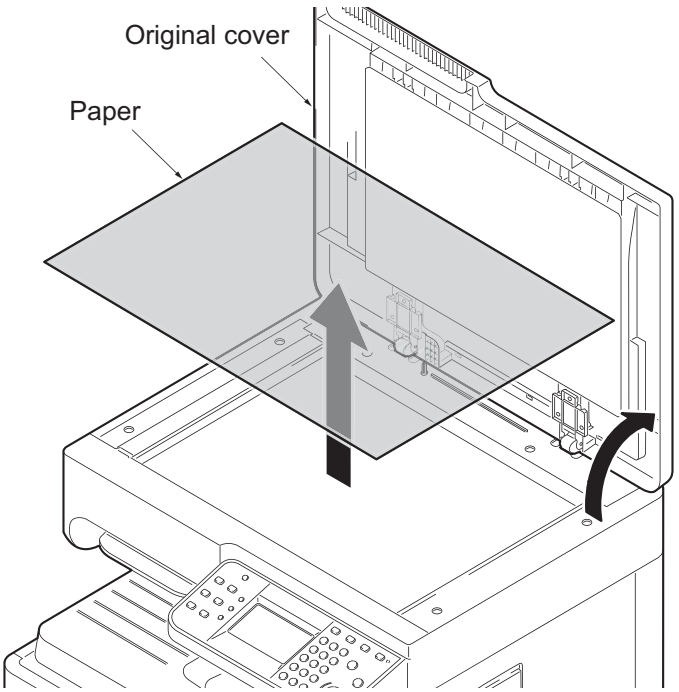

Figure 1-2-6

(Common work)

1. Remove the tape.

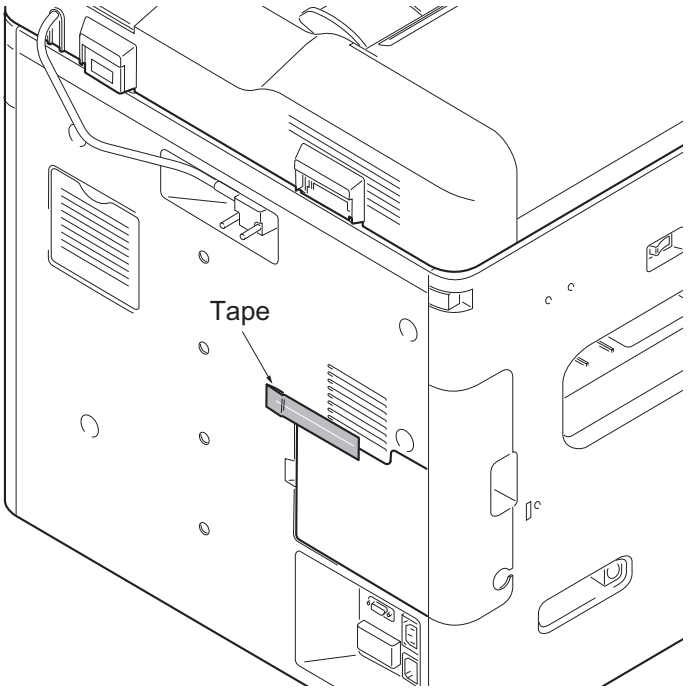

Figure 1-2-7

2. Peel off two protective sheets.
3. Remove the spacer.

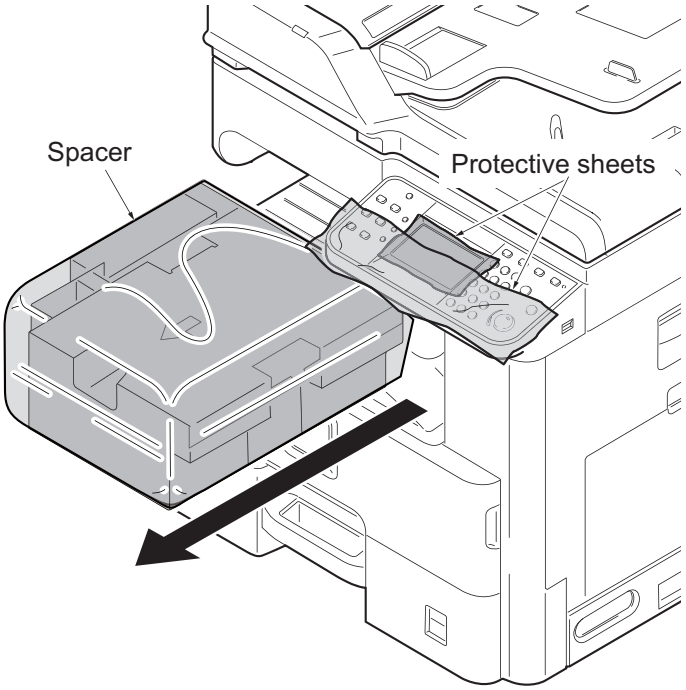

Figure 1-2-8

Install the job separator tray

1. Gently push the job separator tray into the machine along the guides.

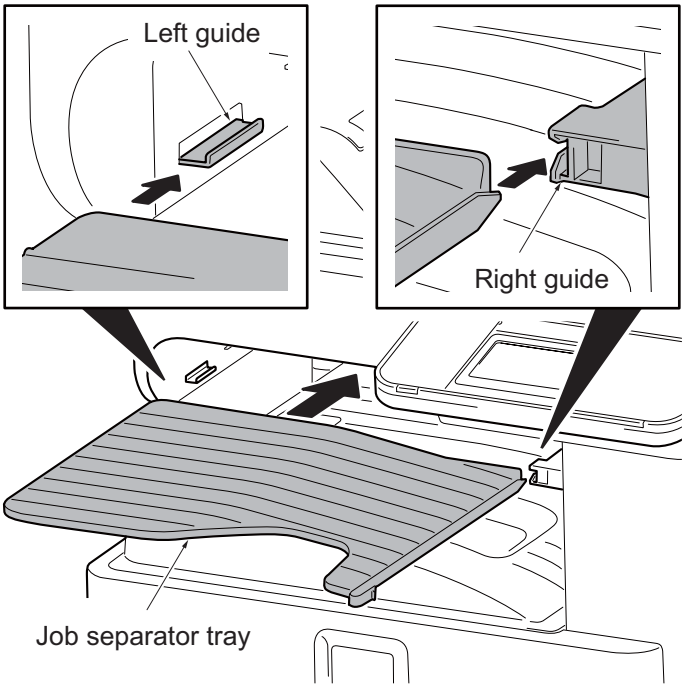

Figure 1-2-9

Release the scanner lock lever

1. Pull the scanner lock lever in the direction of the arrow. This will unlock the scanner mechanism.

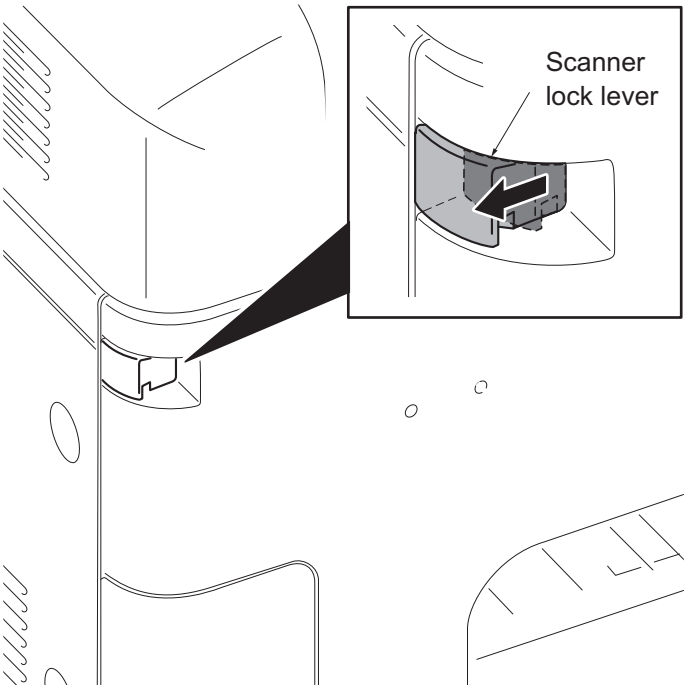

Figure 1-2-10

Install the optional paper feeder (option)

1. Install the optional paper feeder as required.

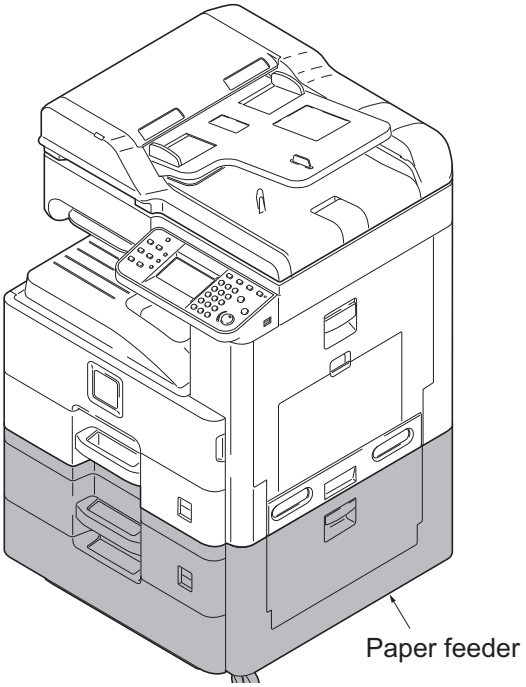

Figure 1-2-11

Load paper

1. Pressing the paper width adjusting tab as shown, move the paper width guides to fit the paper size.

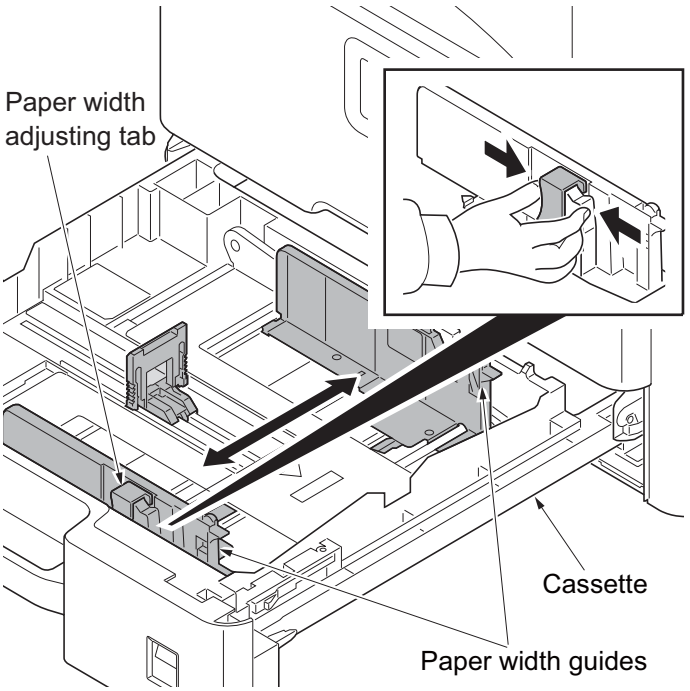

Figure 1-2-12

2. Adjust the paper length guide to fit the paper size.

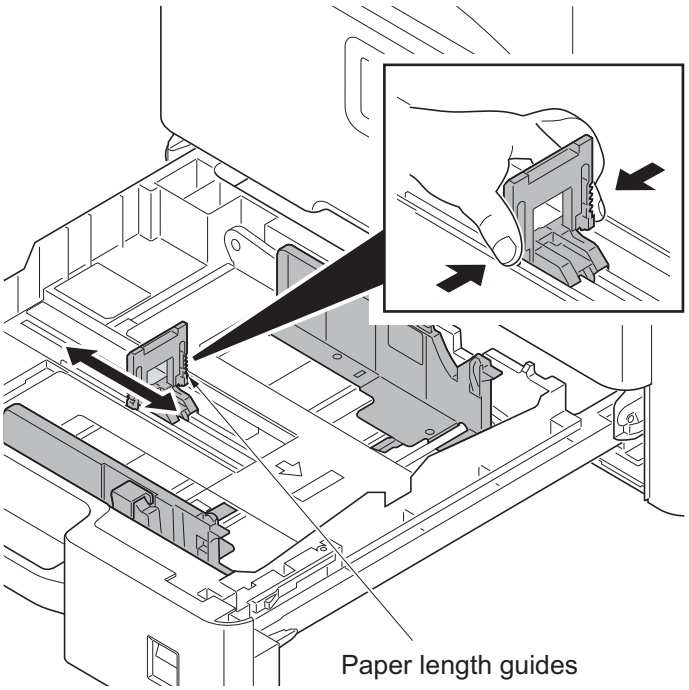

Figure 1-2-13

3. Align the paper so that it is abut with the right end of the cassette.
4. Insert the cassette size plate.
5. Gently push the cassette back in.

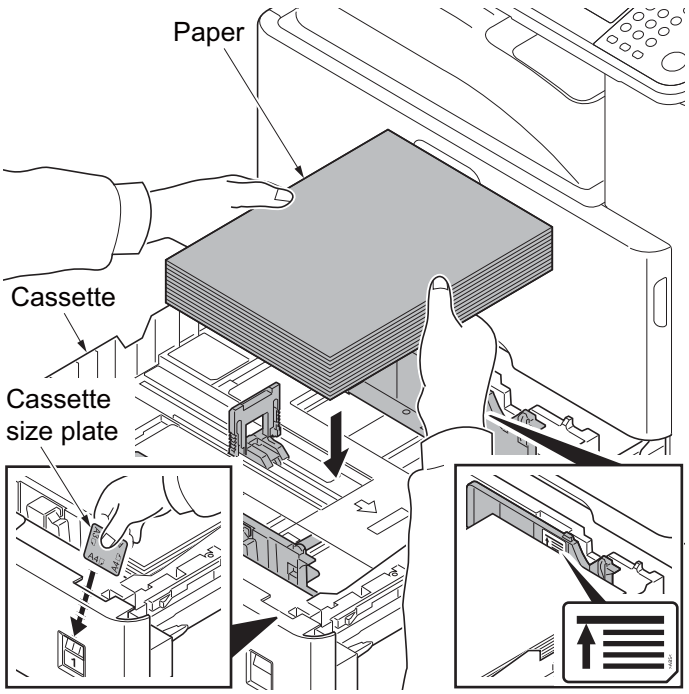

Figure 1-2-14

Install the toner container

1. Open the front cover.
2. Hold the toner container vertically and tap the upper part five times or more. Turn the toner container upside down and tap the upper part five times or more.

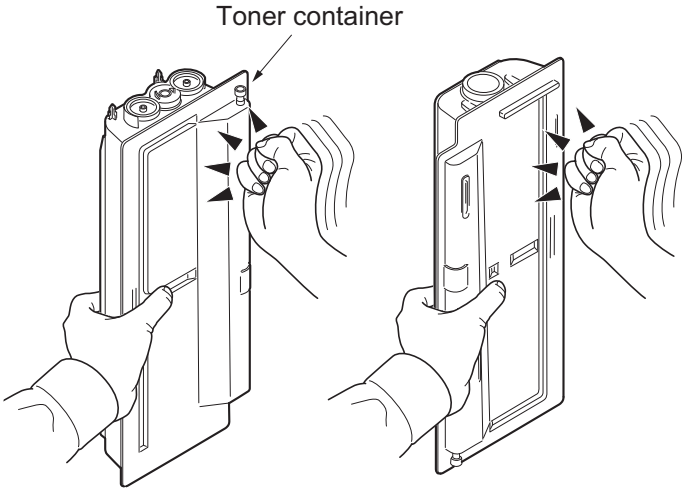

Figure 1-2-15

3. Shake the toner container up and down five times or more. Turn the toner container upside down and shake it five times or more.

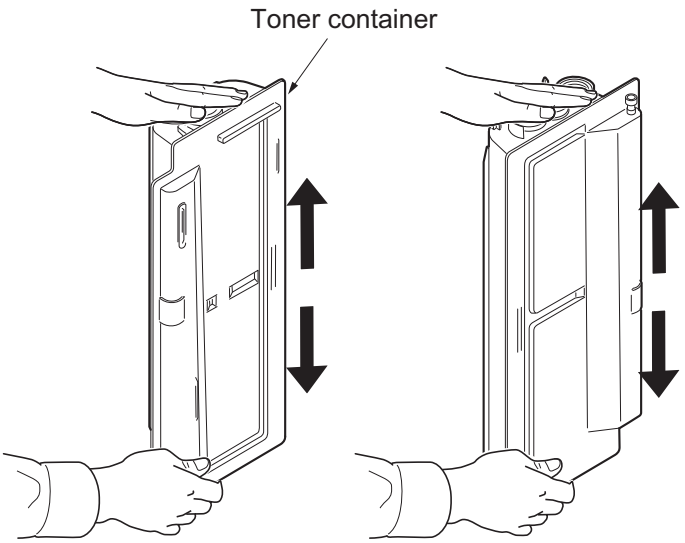

Figure 1-2-16

4. Shake the toner container approximately five or six times in the horizontal direction to stir toner.

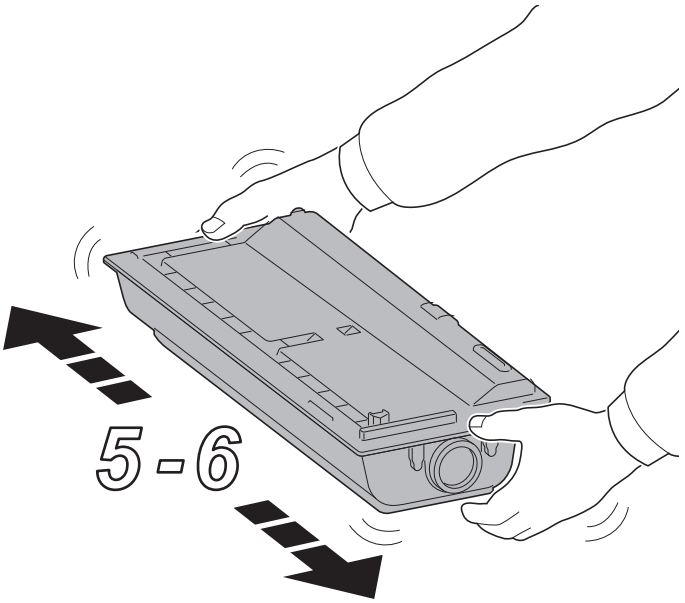

Figure 1-2-17

5. Gently push the toner container into the machine.
   Push the container all the way into the machine until it locks in place.

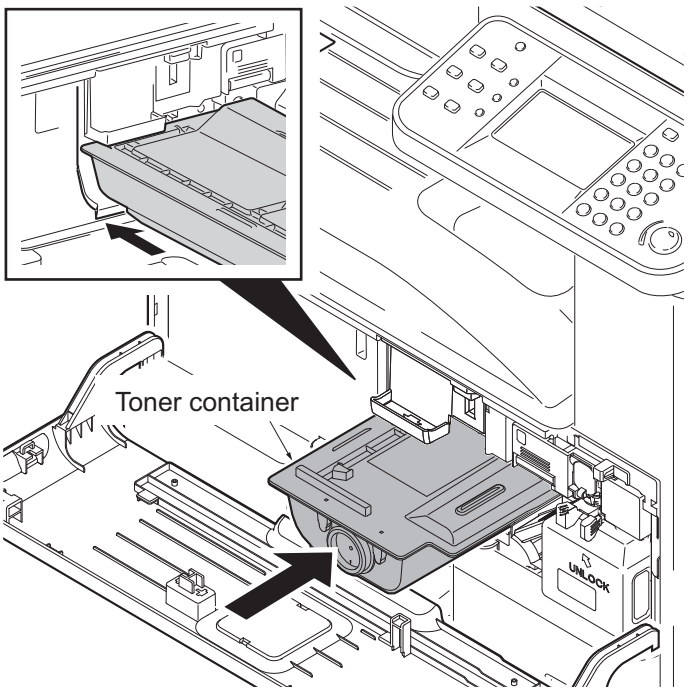

Figure 1-2-18

Switch the cassette heater switch

1. Release the hook and then remove the switch cover.
2. Turn the cassette heater switch on.
   Note: When the cassette heater is used, it turns it on.
3. Refit the switch cover.

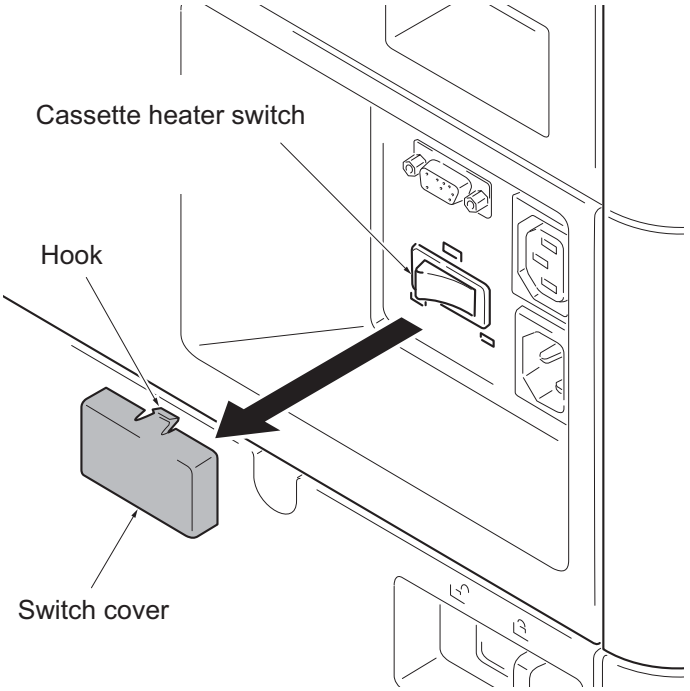

Figure 1-2-19

Install the other optional devices

1. Install the optional devices (Document finisher, Fax kit, etc.) as required.

Connect the power cord

1. Connect the power cord to the connector on the machine.
2. Insert the power plug into the wall outlet.

Installing toner

1. Turn the main power switch on.
   The machine automatically starts to feed toner in the developer unit.
   Note: When the main power switch is turned on for the first time, it takes about ten minutes until entering the state that can be copied.
2. The drive chain is disengaged when toner installation is completed.

Output an own-status report (maintenance item U000)

1. Enter 000 using the numeric keys and press the start key.
2. Select Maintenance and press the start key to output a list of the current settings of the maintenance items.
3. Press the stop key.

Exit maintenance mode

1. The machine is reactivated by tswitching the main switch off and on.

Print out a user setting list

1. Select [Report Print] to print a user setting list.

Make test copies

1. Place an original and make test copies.

Attaching the language label (Excluding 240V AC)

1. Attach the corresponding language label as required.

Installation is completed.

(2) Setting initial copy modes

Factory settings are as follows:

Maintenance item No.	Contents	Factory setting
U253	Switching between double and single counts	Double count (A3/Ledger)
U260	Selecting the timing for copy counting	Eject
U285	Setting service status page	On
U326	Setting the black line cleaning indication	On/8
U343	Switching between duplex/simplex copy mode	Off

1-2-3 Install the expansion memory (option)

Procedure

1. Turn off the main power switch.
   Caution: Do not insert or remove expansion memory while machine power is on.
   Doing so may cause damage to the machine and the expansion memory.
2. Remove the controller box cover.
3. Remove two screws.

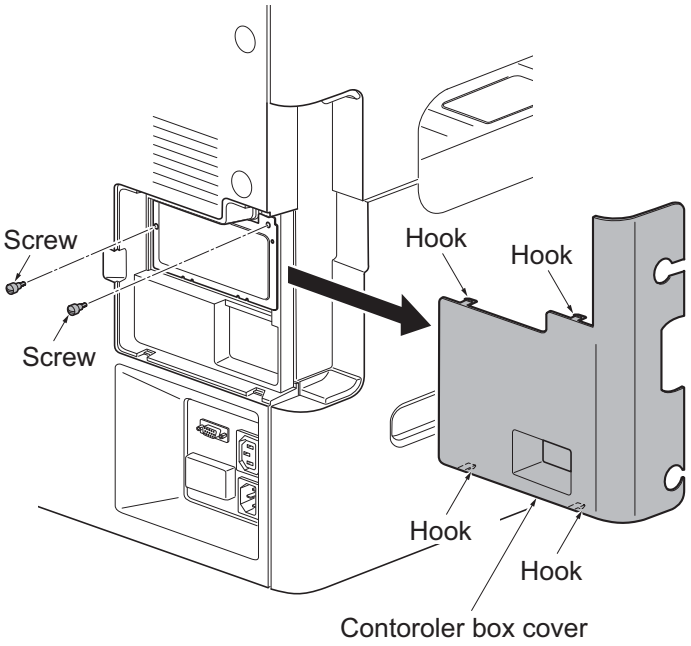

Figure 1-2-20

4. Remove the memory slot cover.
5. Insert the expansion memory into the memory socket so that the notches on the memory align with the corresponding protrusions in the slot.
6. Refit the memory slot cover.
7. Refit the screw.
8. Refit the controller box cover.
9. Print a status page to check the memory expansion.
   If memory expansion has been properly performed, information on the installed memory is printed with the total memory capacity has been increased. Standard memory capacity 512 MB.

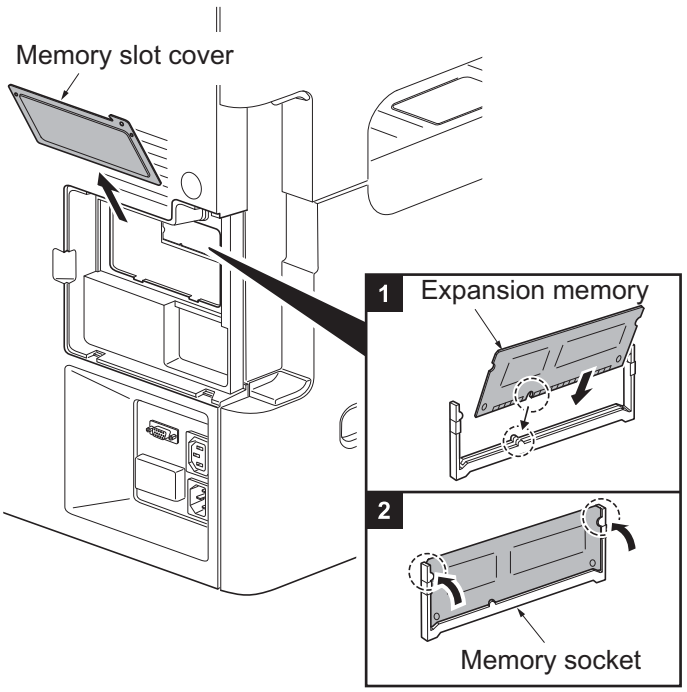

Figure 1-2-21

1-3-1 Maintenance mode

The machine is equipped with a maintenance function which can be used to maintain and service the machine.

(1) Executing a maintenance item

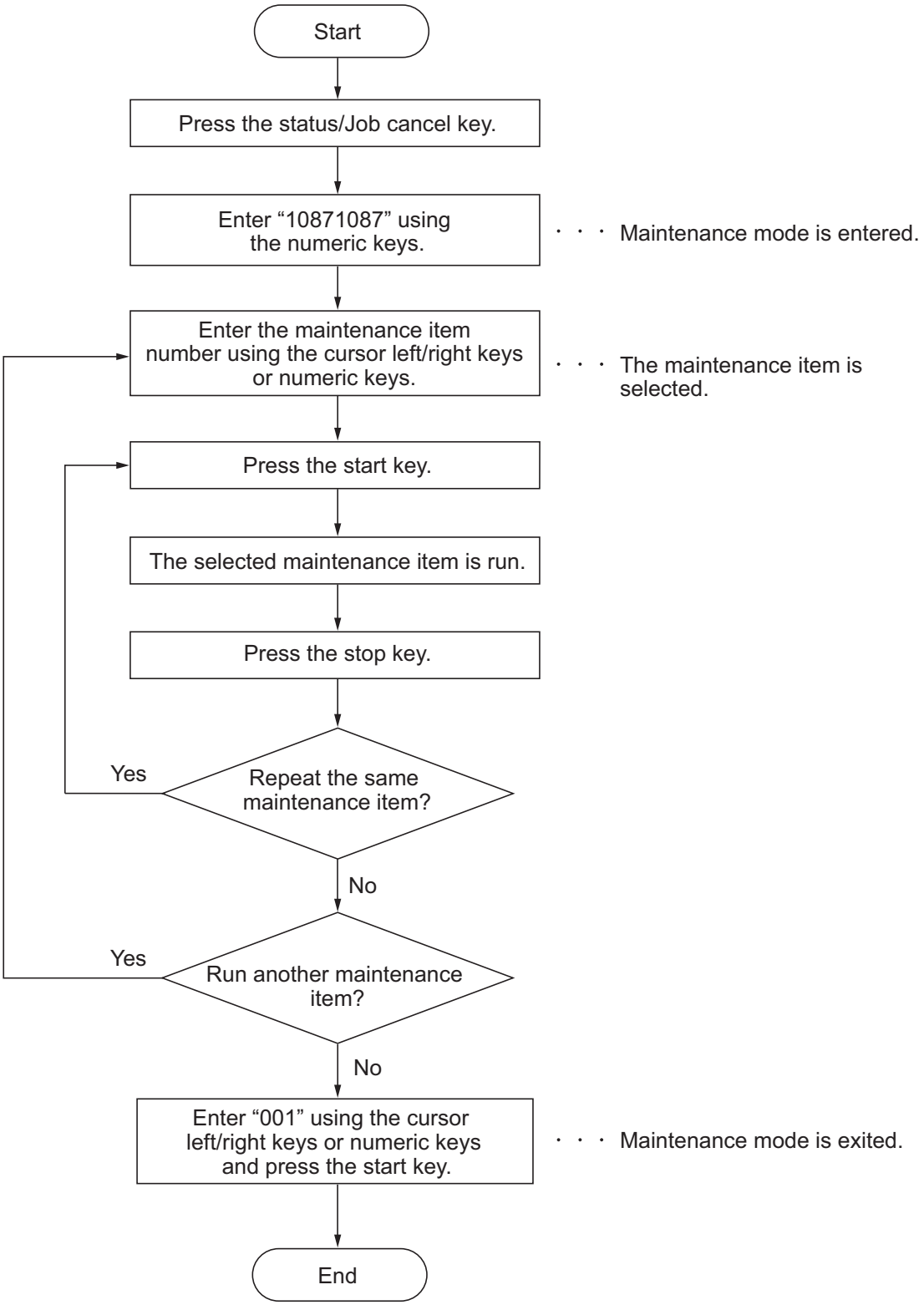

(2) Maintenance modes item list

Section	Item No.	Content of maintenance item	Initial setting
General	U000	Outputting an own-status report	-
	U001	Exiting the maintenance mode	-
	U002	Setting the factory default data	-
	U004	Setting the machine number	-
	U019	Displaying the ROM version	-
Initialization	U021	Memory initializing	-
Drive, paper feed and paper conveying system	U030	Checking the operation of the motors	-
	U031	Checking switches and sensors for paper conveying	-
	U032	Checking the operation of the clutches	-
	U033	Checking the operation of the solenoids	-
	U034	Adjusting the print start timing Leading edge registration Center line	 0/0/0/0/0/0 0/0/0/0/0
	U035	Setting the printing area for folio paper	330/210
	U037	Checking the operation of the fan motors	-
	U051	Adjusting the deflection in the paper	0/0/0/0
	U053	Setting the adjustment of the motor speed	4/0/0
Optical	U063	Adjusting the shading position	0
	U065	Adjusting the scanner magnification	0/0
	U066	Adjusting the scanner leading edge registration	0/0
	U067	Adjusting the scanner center line	0/0
	U068	Adjusting the scanning position for originals from the DP	0/0
	U070	Adjusting the DP magnification	0/0
	U071	Adjusting the DP scanning timing	0/0/0/0
	U072	Adjusting the DP center line	0/0
	U089	Outputting a MIP-PG pattern	-
	U099	Adjusting original size detection	40/30/20/40/30/20/40/30/20/19/19/19/150
			50/50/50/50/50/50/50/50/50/49/49/49/150 (when DP is installed)
High voltage	U100	Setting the main high voltage	-
	U101	Setting the voltage for the primary transfer	0/650/900/1100
	U108	Setting separation shift bias	4
	U111	Checking the drum drive time	-
	U118	Displaying the drum history	-
	U127	Checking/clearing the transfer count	-

Section	Item No.	Content of maintenance item	Initial setting
Developer	U140	Displaying developer bias	170/2700/60
	U147	Setting for toner applying operation	Mode1
	U150	Checking sensors for toner	-
	U157	Checking the developer drive time	-
Fuser	U161	Setting the fuser control temperature	135/150/165
	U199	Displaying fuser heater temperature	-
Operation panel and support equipment	U201	Initializing the touch panel	-
	U203	Checking DP operation	-
	U207	Checking the operation panel keys	-
	U222	Setting the IC card type	Other
	U243	Checking the operation of the DP motors	-
	U244	Checking the DP switches	-
Mode setting	U250	Checking/clearing the maintenance cycle	-
	U251	Checking/clearing the maintenance counter	-
	U253	Switching between double and single counts	Double count (A3/Ledger)
	U260	Selecting the timing for copy counting	Eject
	U285	Setting service status page	On
	U326	Setting the black line cleaning indication	On/8
	U332	Setting the size conversion factor	1.0
	U341	Specific paper feed location setting for printing function	-
	U343	Switching between duplex/simplex copy mode	Off
	U345	Setting the value for maintenance due indication	0
Image processing	U402	Adjusting margins of image printing	3.0/2.5/2.5/5.0
	U403	Adjusting margins for scanning an original on the contact glass	2.0/2.0/2.0/2.0
	U404	Adjusting margins for scanning an original from the DP	3.0/2.5/3.0/4.0
	U407	Adjusting the leading edge registration for memory image printing	0
	U411	Adjusting the scanner automatically	-
	U425	Setting the target	-
	U432	Setting the center offset for the exposure	0/0/0
	U470	Setting the JPEG compression ratio Copy Send System	 90/90 30/40/51/70/90 30/40/51/70/90 15/25/60 15/25/60 90/90

Section	Item No.	Content of maintenance item	Initial setting
Others	U901	Checking copy counts by paper feed locations	-
	U903	Checking/clearing the paper jam counts	-
	U904	Checking/clearing the call for service counts	-
	U905	Checking counts by optional devices	-
	U910	Clearing the print coverage data	-
	U917	Setting backup data reading/writing	-
	U927	Clearing the all copy counts and machine life counts (one time only)	-
	U935	Relay board maintenance	Mode0
	U942	Setting of deflection for feeding from DP	0/0
	U985	Displaying the developer history	-

(3) Contents of the maintenance mode items

<table>
<tr><th>Item No.</th><th>Description</th></tr>
<tr><td>U000</td><td>

Outputting an own-status report

Description
Outputs lists of the current settings of the maintenance items and paper jam and service call occurrences. Outputs the event log. Also sends output data to the USB memory.
Purpose
To check the current setting of the maintenance items, or paper jam or service call occurrences. Before initializing or replacing the backup RAM, output a list of the current settings of the maintenance items to reenter the settings after initialization or replacement.

Method
1. Press the start key.
2. Select the item to be output using the cursor up/down keys.
3. Select On or Off using the cursor left/right keys or numeric keys.

<table>
<tr><th>Display</th><th>Output list</th></tr>
<tr><td>Maintenance</td><td>List of the current settings of the maintenance modes</td></tr>
<tr><td>Event</td><td>Outputs the event log</td></tr>
<tr><td>All</td><td>Outputs the all reports</td></tr>
</table>

4. Press the start key. A list is output.

Method: Send to the USB memory
1. Press the power key on the operation panel, and after verifying the main power indicator has gone off, switch off the main power switch.
2. Insert USB memory in USB memory slot.
3. Turn the main power switch on.
4. Enter the maintenance item.
5. Press the start key.
6. Select the item to be send.
7. Select [Text] or [HTML].

<table>
<tr><th>Display</th><th>Output list</th></tr>
<tr><td>Print</td><td>Outputs the report</td></tr>
<tr><td>USB (Text)</td><td>Sends output data to the USB memory (text type)</td></tr>
<tr><td>USB (HTML)</td><td>Sends output data to the USB memory (HTML type)</td></tr>
</table>

8. Press the start key.
   Output will be sent to the USB memory.

Completion
Press the stop key. The screen for selecting a maintenance item No. is displayed.

</td></tr>
</table>

Item No.	Description
U000	**Event log**

Event Log

MFP

(2) 04/Sep/2010 08:40

(1) Firmware version 2K3_2000.000.000 2010.09.04

(3) [XXXXXXXX] (4) [XXXXXXXX] (5) [XXXXXXXX]

(7) Paper Jam Log

#	Count.	Event Descriprions
16	1876543	0501.01.08.01.01
15	166554	4002.01.08.01.01
14	4988	0501.01.08.01.01
13	4988	4002.01.08.01.01
12	4988	0501.01.08.01.01
11	4988	4002.01.08.01.01
10	1103	0501.01.08.01.01
9	1103	4002.01.08.01.01
8	1103	0501.01.08.01.01
7	1103	4002.01.08.01.01
6	1027	0501.01.08.01.01
5	1027	4002.01.08.01.01
4	1027	0501.01.08.01.01
3	1027	4002.01.08.01.01
2	406	0501.01.08.01.01
1	36	4002.01.08.01.01

0501.01.08.01.01
(a) (b) (c) (d) (e)

(8) Service Call Log

#	Count.	Service Code
8	1881214	01.6000
7	178944	01.2100
6	5296	01.4000
5	5295	01.6000
4	2099	01.2100
3	1054	01.4000
2	809	01.6000
1	30	01.2100

(9) Maintenance Log

#	Count.	Item
8	1045571	01.00
7	104511	01.00
6	7045	01.00
5	3454	01.00
4	3454	01.01
3	3454	01.01
2	417	01.01
1	34	01.01

(10) Unknown toner Log

#	Count.	Item
5	3454	01.00
4	3454	01.00
3	3454	01.00
2	406	01.00
1	32	01.00

(11) Counter Log

(f)

J0100: 0	J0511: 0	J4201: 0
J0101: 0	J0512: 0	J4202: 0
J0104: 0	J0513: 0	J4203: 0
J0106: 0	J0518: 0	J4208: 0
J0107: 0	J0519: 0	J4209: 0
.	.	.
.	.	.
.	.	.
.	.	.
.	.	.
.	.	.

(g)

C0030: 1	C2000: 1
C0070: 1	C2010: 1
C0100: 1	C2600: 1
C0120: 1	C3100: 1
C0130: 1	C3200: 1
.	.
.	.
.	.
.	.
.	.
.	.

(h) T00: 1
T01: 1

(6) [XXXXXXXXXXXXXXXX]

Figure 1-3-1

Item No.	Description
U000	**Detail of event log**

No.	Items	Description		
(1)	System version			
(2)	System date			
(3)	Engine soft version			
(4)	Engine boot version			
(5)	Operation panel mask version			
(6)	Machine serial number			
(7)	Paper Jam Log	#	Count.	Event
		Remembers 1 to 16 of occurrence. If the occurrence of the previous paper jam is less than 16, all of the paper jams are logged. When the occurrence excesseds 16, the oldest occurrence is removed.	The total page count at the time of the paper jam.	Log code (hexadecimal, 5 categories) (a) Cause of a paper jam (b) Paper source (c) Paper size (d) Paper type (e) Paper eject
		(a) Cause of paper jam (Hexadecimal)		
		Refer to P.1-4-1 for paper jam location 0000: Initial jam 0100: Secondary paper feed request time out 0101: Waiting for process package to be ready 0104: Waiting for conveying package to be ready 0106: Paper feeding request for duplex printing time out 0107: Waiting for fuser package to be ready 0110: Right cover open 0111: Front cover open 0120: Receiving a duplex paper feeding request while paper is empty 0121: Exceeding number of duplex pages circulated 0210: Right lower cover open 0501: No paper feed from cassette 1 0502: No paper feed from cassette 2 0503: No paper feed from cassette 3 0508: No paper feed from duplex section 0509: No paper feed from MP tray 0511: Multiple sheets in cassette 1 0512: Multiple sheets in cassette 2 0513: Multiple sheets in cassette 3 0518: Multiple sheets in duplex section 0519: Multiple sheets in MP tray 1403: PF feed sensor 1 non arrival jam 1413: PF feed sensor 1 stay jam 4002: Registration sensor non arrival jam (cassette 2) 4003: Registration sensor non arrival jam (cassette 3)		

Item No.	Description
U000	

No.	Items	Description
(7) cont.	Paper Jam Log	4012: Registration sensor stay jam (cassette 2) 4013: Registration sensor stay jam (cassette 3) 4201: Eject sensor non arrival jam (cassette 1) 4202: Eject sensor non arrival jam (cassette 2) 4203: Eject sensor non arrival jam (cassette 3) 4208: Eject sensor non arrival jam (duplex) 4209: Eject sensor non arrival jam (Mp tray) 4211: Eject sensor stay jam (cassette 1) 4212: Eject sensor stay jam (cassette 2) 4213: Eject sensor stay jam (cassette 3) 4218: Eject sensor stay jam (duplex) 4219: Eject sensor stay jam (MP tray) 4301: Duplex sensor non arrival jam (cassette 1) 4302: Duplex sensor non arrival jam (cassette 2) 4303: Duplex sensor non arrival jam (cassette 3) 4309: Duplex sensor non arrival jam (MP tray) 4311: Duplex sensor stay jam (cassette 1) 4312: Duplex sensor stay jam (cassette 2) 4313: Duplex sensor stay jam (cassette 3) 4319: Duplex sensor stay jam (MP tray) 4901: Bridge conveying sensor 1 non arrival jam (cassette 1) 4902: Bridge conveying sensor 1 non arrival jam (cassette 2) 4903: Bridge conveying sensor 1 non arrival jam (cassette 3) 4908: Bridge conveying sensor 1 non arrival jam (duplex) 4909: Bridge conveying sensor 1 non arrival jam (MP tray) 4911: Bridge conveying sensor 1 stay jam (cassette 1) 4912: Bridge conveying sensor 1 stay jam (cassette 2) 4913: Bridge conveying sensor 1 stay jam (cassette 3) 4918: Bridge conveying sensor 1 stay jam (duplex) 4919: Bridge conveying sensor 1 stay jam (MP tray) 5001: Bridge conveying sensor 3 non arrival jam (cassette 1) 5002: Bridge conveying sensor 3 non arrival jam (cassette 2) 5003: Bridge conveying sensor 3 non arrival jam (cassette 3) 5008: Bridge conveying sensor 3 non arrival jam (duplex) 5009: Bridge conveying sensor 3 non arrival jam (MP tray) 5011: Bridge conveying sensor 3 stay jam (cassette 1) 5012: Bridge conveying sensor 3 stay jam (cassette 2) 5013: Bridge conveying sensor 3 stay jam (cassette 3) 5018: Bridge conveying sensor 3 stay jam (duplex) 5019: Bridge conveying sensor 3 stay jam (MP tray) 6023: Staple cover open 6043: DF top cover open6103: DF paper conveying sensor non arrival jam 6113: DF paper conveying sensor stay jam 6123: DF paper conveying sensor remaining jam 6413: DF eject paper sensor stay jam 6423: DF eject paper sensor remaining jam 6803: Front adjustment plate operation ON error

Item No.	Description
U000	

No.	Items	Description		
(7) cont.	Paper Jam Log	6813: Front adjustment plate operation OFF error 6903: Rear adjustment plate operation ON error 6913: Rear adjustment plate operation OFF error 7013: Staple operation error 7023: Staple initialoperation error 7913: Sequence error 1 (operation prohibited) 7923: Sequence error 2 (initialoperation error) 7933: Sequence error 3 (Error in the reception of backup data) 7943: Sequence error 4 (standby) 7953: Sequence error 5 (Error in between copies) 9000: No original feed 9001: DP original conveying jam 9004: DP original swichback jam 9010: DP open 9011: DP top cover open 9110: DP paper feed sensor stay jam 9200: DP registration sensor non arrival jam 9400: DP timing sensor non arrival jam 9410: DP timing sensor stay jam		
		(b) Detail of paper source (Hexadecimal)		
		00: MP tray 01: Cassette 1 02: Cassette 2 (paper feeder 1) 03: Cassette 3 (paper feeder 2) 04 to 09: Reserved		
		(c) Detail of paper size (Hexadecimal)		
		00: (Not specified) 01: Monarch 02: Business 03: International DL 04: International C5 05: Executive 06: Letter-R 86: Letter-E 07: Legal 08: A4R 88: A4E 09: B5R 89: B5E 0A: A3	0B: B4 0C: Ledger 0D: A5R 0E: A6 0F: B6 10: Commercial #9 11: Commercial #6 12: ISO B5 13: Custom size 1E: C4 1F: Postcard 20: Reply-paid post-card 21: Oficio II	22: Special 1 23: Special 2 24: A3 wide 25: Ledger wide 26: Full bleed paper (12 x 8) 27: 8K 28: 16K-R A8: 16K-E 32: Statement-R B2: Statement-E 33: Folio 34: Western type 2 35: Western type 4

Item No.	Description
U000	

No.	Items	Description		
(7) cont.	Paper Jam Log	(d) Detail of paper type (Hexadecimal)		
		01: Plain 02: Transparency 03: Preprinted 04: Labels 05: Bond 06: Recycled 07: Vellum 08: Rough 09: Letterhead	0A: Color 0B: Prepunched 0C: Envelope 0D: Cardstock 0E: Coated 0F: 2nd side 10: Media 16 11: High quality	15: Custom 1 16: Custom 2 17: Custom 3 18: Custom 4 19: Custom 5 1A: Custom 6 1B: Custom 7 1C: Custom 8
		(e) Detail of paper eject location (Hexadecimal)		
		01: Face down (FD) 02: Face up (FU)/Document finisher face up (FU)/ 03: Document finisher face down (FD)		
(8)	Service Call Log	#	Count.	Service Code
		Remembers 1 to 8 of occurrence of self diagnostics error. If the occurrence of the previous diagnostics error is less than 8, all of the diagnostics errors are logged.	The total page count at the time of the self diagnostics error.	Self diagnostic error code (See page 1-4-7) Example: 01.6000 01: Self diagnostic error 6000: Self diagnostic error code number
(9)	Maintenance Log	#	Count.	Item
		Remembers 1 to 8 of occurrence of replacement. If the occurrence of the previous replacement of toner container is less than 8, all of the occurrences of replacement are logged.	The total page count at the time of the replacement of the toner container.	Code of maintenance replacing item (1 byte, 2 categories) First byte (Replacing item) 01: Toner container Second byte (Type of replacing item) 00: Black First byte (Replacing item) 02: Maintenance kit Second byte (Type of replacing item) 01: MK-477/475/479

Item No.	Description
U000	

No.	Items	Description		
(10)	Unknown Toner Log	#	Count.	Item
		Remembers 1 to 5 of occurrence of unknown toner detection. If the occurrence of the previous unknown toner detection is less than 5, all of the unknown toner detection are logged.	The total page count at the time of the toner empty error with using an unknown toner container.	Unknown toner log code (1 byte, 2 categories) First byte 01: Toner container (Fixed) Second byte 00: Black
(11)	Counter Log Comprised of three log counters including paper jams, self diagnostics errors, and replacement of the toner container.	(f) Paper jam	(g) Self diagnostic error	(h) Maintenance item replacing
		Indicates the log counter of paper jams depending on location. Refer to Paper Jam Log. All instances including those are not occurred are displayed.	Indicates the log counter of self diagnostics errors depending on cause. (See page 1-3-5) Example: C6000: 4 Self diagnostics error 6000 has happened four times.	Indicates the log counter depending on the maintenance item for maintenance. T: Toner container 00: Black M: Maintenance kit 01: MK-477/475/479 Example: T00: 1 The toner container has been replaced once.

Item No.	Description
U001	**Exiting the maintenance mode** **Description** Exits the maintenance mode and returns to the normal copy mode. **Purpose** To exit the maintenance mode. **Method** Press the start key. The normal copy mode is entered.
U002	**Setting the factory default data** **Description** Restores the machine conditions to the factory default settings. **Purpose** To move the mirror frame of the scanner to the position for transport **Method** 1. Press the start key. 2. Select [Mode1(All)]. 3. Press the start key. The mirror frame of the scanner returns to the position for transport. 4. Turn the main power switch off and on. * : An error code is displayed in case of an initialization error. When errors occurred, turn main power switch off then on, and execute initialization using maintenance item U002. **Error codes** Codes: 0001 — Entity error 0002 — Controller error 0020 — Engine error 0040 — Scanner error

Item No.	Description
U004	**Setting the machine number** **Description** Sets or displays the machine number. **Purpose** To check or set the machine number. **Method** 1. Press the start key. If the machine serial number of engine PWB matches with that of main PWB Display: Machine No. Description: Displays the machine serial number If the machine serial number of engine PWB does not match with that of main PWB Display: Machine No.(Main) Description: Displays the machine serial number of main Display: Machine No.(Eng) Description: Displays the machine serial number of engine **Setting** Carry out if the machine serial number does not match. 1. Select [Execute]. 2. Press the start key. Writing of serial No. starts. 3. Turn the main power switch off and on. **Completion** Press the stop key. The screen for selecting a maintenance item No. is displayed.

Item No.	Description
U019	**Displaying the ROM version** **Description** Displays the part number of the ROM fitted to each PWB. **Purpose** To check the part number or to decide, if the newest version of ROM is installed. **Method** 1. Press the start key. The ROM version are displayed. 2. Change the screen using the cursor up/down keys.

Display	Description
Main	Main ROM
MMI	Operation ROM
Engine	Engine ROM
Engine Boot	Engine booting
RFID	RFID ROM
IO CPU	IO CPU ROM
IO CPU Boot	IO CPU booting
Option Language	Optional language ROM
Dictionary	-
DP	Document processor ROM
DP Boot	Document processor booting
PF	Paper feeder ROM
PF Boot	Paper feeder booting
DF	Document finisher ROM
DF Boot	Document finisher booting
AK	Bridge ROM
AK Boot	Bridge booting
Fax APL	Fax control PWB APL
Fax Boot	Fax control PWB booting
Fax IPL	Fax control PWB IPL

Completion
Press the stop key. The screen for selecting a maintenance item No. is displayed.

Item No.	Description
U021	**Memory initializing** **Description** Initializes all settings, except those pertinent to the type of machine, namely each counter, service call history and mode setting. Also initializes backup RAM according to region specification selected in maintenance item U252 Setting the destination. **Purpose** To return the machine settings to their factory default. **Method** 1. Press the start key. 2. Select [Execute]. 3. Press the start key. All data other than that for adjustments due to variations between machines is initialized based on the destination setting. 4. Turn the main power switch off and on. * : An error code is displayed in case of an initialization error. When errors occurred, turn main power switch off then on, and execute initialization using maintenance item U021. **Error codes** Codes: 0001 — Entity error 0002 — Controller error 0020 — Engine error 0040 — Scanner error

<table>
<tr><th>Item No.</th><th>Description</th></tr>
<tr><td>U030</td><td>

Checking the operation of the motors

Description
Drives each motor.
Purpose
To check the operation of each motor.

Method
1. Press the start key.
2. Select the motor to be operated.
3. Press the start key. The operation starts.

<table>
<tr><th>Display</th><th>Description</th></tr>
<tr><td>Main</td><td>Main motor (MM) is turned on</td></tr>
<tr><td>Exit (CW)</td><td>Eject motor (EM) is turned on clockwise</td></tr>
<tr><td>Exit (CCW)</td><td>Eject motor (EM) is turned on counterclockwise</td></tr>
</table>

4. To stop operation, press the stop key.

Completion
Press the stop key. The screen for selecting a maintenance item No. is displayed.

</td></tr>
<tr><td>U031</td><td>

Checking switches and sensors for paper conveying

Description
Displays the on-off status of each paper detection switch or sensor on the paper path.
Purpose
To check if the switches and sensors for paper conveying operate correctly.

Method
1. Press the start key.
2. Turn each switch or sensor on and off manually to check the status.
   When a switch or sensor is detected to be in the ON position, the display for that switch or sensor will be “1”.

<table>
<tr><th>Display</th><th>Switches and sensors</th></tr>
<tr><td>Switch 00000000</td><td></td></tr>
<tr><td>1st digit</td><td>Toner container switch (TCSW)</td></tr>
<tr><td>2nd digit</td><td>Bridge detection switch (BRDSW)</td></tr>
<tr><td>3rd digit</td><td>Job paper full sensor (JPFS)</td></tr>
<tr><td>4th digit</td><td>Paper full sensor (PFS)</td></tr>
<tr><td>5th digit</td><td>Feed sensor (FS)</td></tr>
<tr><td>6th digit</td><td>Duplex sensor (DUS)</td></tr>
<tr><td>7th digit</td><td>Eject sensor (ES)</td></tr>
<tr><td>8th digit</td><td>Registration sensor (RS)</td></tr>
</table>

Completion
Press the stop key. The screen for selecting a maintenance item No. is displayed.

</td></tr>
</table>

<table>
<tr><th>Item No.</th><th>Description</th></tr>
<tr><td>U032</td><td>

Checking the operation of the clutches

Description
Turns each clutch on.
Purpose
To check the operation of each clutch.

Method
1. Press the start key.
2. Select the clutch to be operated.
3. Press the start key. The operation starts.

<table>
<tr><th>Display</th><th>Description</th></tr>
<tr><td>Feed</td><td>Paper feed clutch (PFCL) is turned on</td></tr>
<tr><td>Regist</td><td>Registration clutch (RCL) is turned on</td></tr>
<tr><td>Duplex</td><td>Duplex clutch (DUCL) is turned on</td></tr>
</table>

4. Press the stop key.

Completion
Press the stop key. The screen for selecting a maintenance item No. is displayed.

</td></tr>
<tr><td>U033</td><td>

Checking the operation of the solenoids

Description
Turns each solenoid on.
Purpose
To check the operation of each solenoid.

Method
1. Press the start key.
2. Select the solenoid to be operated.
3. Press the start key. The operation starts.

<table>
<tr><th>Display</th><th>Description</th></tr>
<tr><td>MPT</td><td>MP solenoid (MPSOL) is turned on</td></tr>
<tr><td>Eject</td><td>Feedshift solenoid (FSSOL) is turned on</td></tr>
</table>

4. Press the stop key.

Completion
Press the stop key. The screen for selecting a maintenance item No. is displayed.

</td></tr>
</table>

Item No.	Description
U034	**Adjusting the print start timing** **Description** Adjusts the leading edge registration or center line. **Purpose** Make the adjustment if there is a regular error between the leading edges of the copy image and original. Make the adjustment if there is a regular error between the center lines of the copy image and original. **Method** 1. Press the start key. 2. Select the item to be adjusted.

Display	Description
LSU Out Top	Leading edge registration adjustment
LSU Out Left	Center line adjustment

Adjustment: Leading edge registration adjustment

1. Press the system menu key.
2. Press the start key to output a test pattern.
3. Press the system menu key.
4. Select the item to be adjusted.

Display	Description	Setting range	Initial setting	Change in value per step
MPT(L)	Paper feed from MP tray (when large size paper is used)	-128 to 127	0	0.1 mm
Cassette(L)	Paper feed from cassette (when large size paper is used)	-128 to 127	0	0.1 mm
Duplex(L)	Duplex mode (second) (when large size paper is used)	-128 to 127	0	0.1 mm
MPT(S)	Paper feed from MP tray (when small size paper is used)	-128 to 127	0	0.1 mm
Cassette(S)	Paper feed from cassette (when small size paper is used)	-128 to 127	0	0.1 mm
Duplex(S)	Duplex mode (second) (when small size paper is used)	-128 to 127	0	0.1 mm

Large size: 218 mm or more in width of paper.

Item No.	Description
U034	

5. Change the setting value using the cursor left/right keys or numeric keys.
   For output example 1, increase the value. For output example 2, decrease the value.

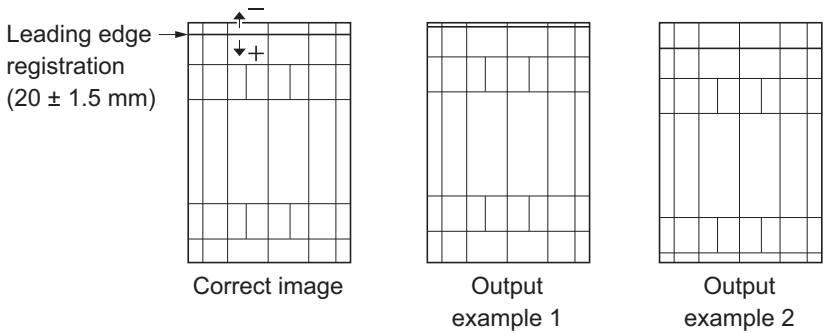

Figure 1-3-2

6. Press the start key. The value is set.

Remark
When changing the setting value of [Large] each item is modified, equal to amount of the value which is changed adds also the value of [Small] each item and is pulled.

Caution
Check the copy image after the adjustment. If the image is still incorrect, perform the following adjustments in maintenance mode.

U034 → U066 (P.1-3-27) → U071 (P.1-3-32)

Adjustment: Center line adjustment
1. Press the system menu key.
2. Press the start key to output a test pattern.
3. Press the system menu key.
4. Select the item to be adjusted.

Display	Description	Setting range	Initial setting	Change in value per step
MPT	Paper feed from MP tray	-128 to 127	0	0.1 mm
Cassette1	Paper feed from cassette 1	-128 to 127	0	0.1 mm
Cassette2	Paper feed from optional cassette 2	-128 to 127	0	0.1 mm
Cassette3	Paper feed from optional cassette 3	-128 to 127	0	0.1 mm
Duplex	Duplex mode (second)	-128 to 127	0	0.1 mm

Item No.	Description
U034	5. Change the setting value using the cursor left/right keys or numeric keys. For output example 1, increase the value. For output example 2, decrease the value. 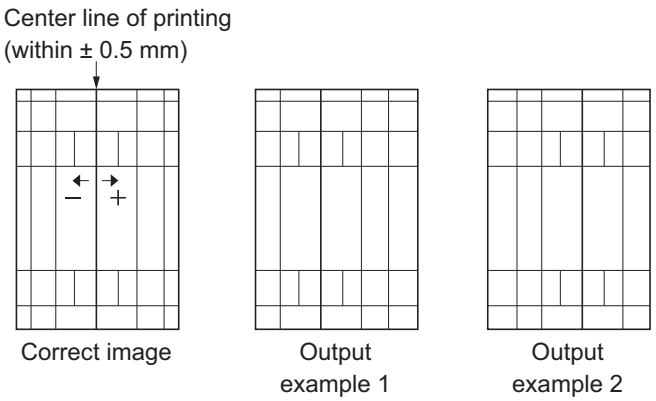 **Figure 1-3-3** 6. Press the start key. The value is set. **Caution** Check the copy image after the adjustment. If the image is still incorrect, perform the following adjustments in maintenance mode. U034 → U067 (P.1-3-28) → U072 (P.1-3-34) **Completion** Press the stop key. The screen for selecting a maintenance item No. is displayed.

Item No.	Description
U035	**Setting the printing area for folio paper** **Description** Changes the printing area for copying on folio paper. **Purpose** To prevent cropped images on the trailing edge or left/right side of copy paper by setting the actual printing area for folio paper. **Setting** 1. Press the start key. 2. Select the item to be set. 3. Change the setting value using the cursor left/right keys. **Display** / **Description** / **Setting range** / **Initial setting** Length / Length / 330 to 356 mm / 330 Width / Width / 200 to 220 mm / 210 4. Press the start key. The value is set. **Completion** Press the stop key. The screen for selecting a maintenance item No. is displayed.
U037	**Checking the operation of the fan motors** **Description** Drives each fan motor. **Purpose** To check the operation of each fan motor. **Method** 1. Press the start key. 2. Select the fan motor to be operated. 3. Press the start key. The operation starts. **Display** / **Description** All / All fan motors are turned on Eject / Eject fan motor (EFM) is turned on Low Power / Power source fan motor (PSFM) is turned on To stop operation, press the stop key. **Completion** Press the stop key. The screen for selecting a maintenance item No. is displayed.

Item No.	Description
U051	**Adjusting the deflection in the paper**

Description
Adjusts the deflection in the paper at the registration roller.
Purpose
Make the adjustment if the leading edge of the copy image is missing or varies randomly, or if the copy paper is Z-folded.

Adjustment
1. Press the start key.
2. Press the system menu key.
3. Place an original and press the start key to make a test copy.
4. Press the system menu key.
5. Select the item to be adjusted.

Display	Description	Setting range	Initial setting
MPT	Paper feed from MP tray	-30 to 20	0
Cassette	Paper feed from cassette 1	-30 to 20	0
PF	Paper feed from paper feeder	-30 to 20	0
Duplex	Duplex mode (second)	-30 to 20	0

6. Change the setting value using the cursor left/right keys or numeric keys.
   For output example 1, increase the value. For output example 2, decrease the value.
   The greater the value, the larger the deflection; the smaller the value, the smaller the deflection.

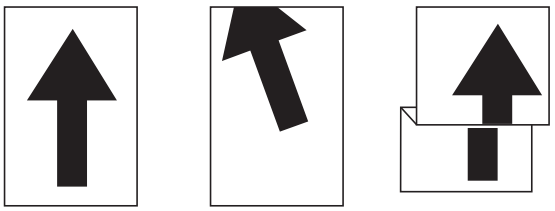

Figure 1-3-4

7. Press the start key. The value is set.

Completion
Press the stop key. The indication for selecting a maintenance item No. appears.

Item No.	Description
U053	**Setting the adjustment of the motor speed**

Description
Performs fine adjustment of the speeds of the motors.
Purpose
To adjust the speed of the respective motors when the magnification is not correct.

Method
1. Press the start key.
2. Select the item to be adjusted.

Display	Description	Setting range	Initial setting
Main	Main motor (MM) speed adjustment	-40 to 40	4
Polygon	Polygon motor (PM) speed adjustment	-20 to 20	0
Exit	Eject motor (EM) speed adjustment	-40 to 40	0

Adjustment
1. Press the system menu key.
2. Press the start key to output an A3/Ledger VTC pattern.

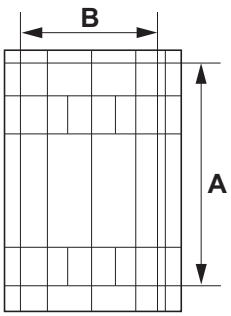

Correct values for an A3/Ledger output are:
A = 350 ± 1.4 mm
B = 250 ± 1.0 mm

Figure 1-3-5

3. Press the system menu key.
4. A: Magnification in the auxiliary scanning direction
   1) Select [Main].
   2) Change the setting value using the cursor left/right keys or numeric keys.
      Increasing the setting makes the image longer in the auxiliary scanning direction, and decreasing it makes the image shorter in the auxiliary scanning direction.
   B: Magnification in the main scanning direction
   1) Select [Polygon].
   2) Change the setting value using the cursor left/right keys or numeric keys.
      Increasing the setting makes the image shorter in the main scanning direction, and decreasing it makes the image longer in the main scanning direction.
5. Press the start key. The value is set.

Completion
Press the stop key. The indication for selecting a maintenance item No. appears.

Item No.	Description
U063	**Adjusting the shading position** **Description** Changes the shading position of the scanner. **Purpose** Used when the white line continue to appear longitudinally on the image after the shading plate is cleaned. This is due to flaws or stains inside the shading plate. To prevent this problem, the shading position should be changed so that shading is possible without being affected by the flaws or stains. **Setting** 1. Press the start key. 2. Select [Position]. 3. Change the setting value using the cursor left/right keys or numeric keys.

Display	Description	Setting range	Initial setting	Change in value per step
Position	Shading position	-32 to 20	0	0.086 mm

Increasing the value moves the shading position toward the machine left, and decreasing it moves the position toward the machine right.

4. Press the start key. The value is set.

Supplement
While this maintenance item is being executed, copying from an original is available in interrupt copying mode (which is activated by pressing the system menu key).

Completion
Press the stop key. The screen for selecting a maintenance item No. is displayed.

Item No.	Description
U065	**Adjusting the scanner magnification**

Description
Adjusts the magnification of the original scanning.
Purpose
Make the adjustment if the magnification in the main scanning direction is incorrect.
Make the adjustment if the magnification in the auxiliary scanning direction is incorrect.

Caution
Adjust the magnification of the scanner in the following order.

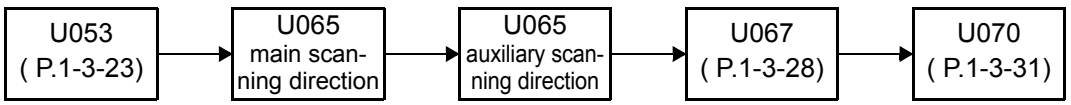

Method
1. Press the start key.
2. Press the system menu key.
3. Place an original and press the start key to make a test copy.
4. Press the system menu key.
5. Select the item to be adjusted.

Display	Description	Setting range	Initial setting	Change in value per step
Y Scan Zoom	Scanner magnification in the main scanning direction	-15 to 15	0	0.1 %
X Scan Zoom	Scanner magnification in the auxiliary scanning direction	-25 to 25	0	0.05 %

Adjustment: [Y Scan Zoom]
1. Change the setting value using the cursor left/right keys or numeric keys.
   For copy example 1, increase the value. For copy example 2, decrease the value.

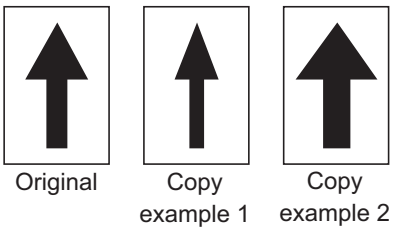

Figure 1-3-6

2. Press the start key. The value is set.

Item No.	Description
U065	**Adjustment: [X Scan Zoom]** 1. Change the setting value using the cursor left/right keys or numeric keys. For copy example 1, increase the value. For copy example 2, decrease the value. 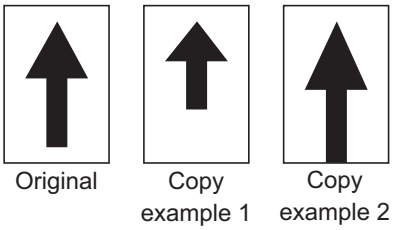 **Figure 1-3-7** 2. Press the start key. The value is set. **Completion** Press the stop key. The screen for selecting a maintenance item No. is displayed.

Item No.	Description
U066	**Adjusting the scanner leading edge registration**

Description
Adjusts the scanner leading edge registration of the original scanning.
Purpose
Make the adjustment if there is a regular error between the leading edges of the copy image and original.

Adjustment
1. Press the start key.
2. Press the system menu key.
3. Place an original and press the start key to make a test copy.
4. Press the system menu key.
5. Select the item to be adjusted.

Display	Description	Setting range	Initial setting	Change in value per step
Front	Scanner leading edge registration	-45 to 45	0	0.113 mm
Rotate	Scanner leading edge registration (rotate copying)	-45 to 45	0	0.113 mm

6. Change the setting value using the cursor left/right keys or numeric keys.
   For copy example 1, increase the value. For copy example 2, decrease the value.

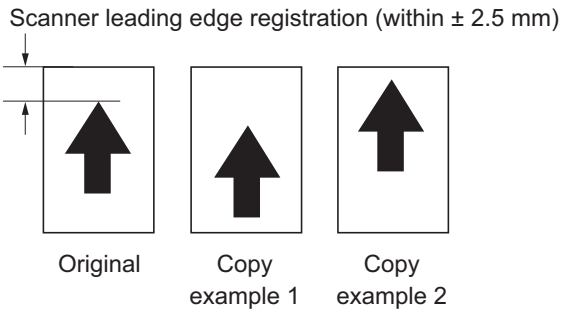

Figure 1-3-8

7. Press the start key. The value is set.

Caution
Check the copy image after the adjustment. If the image is still incorrect, perform the following adjustments in maintenance mode.

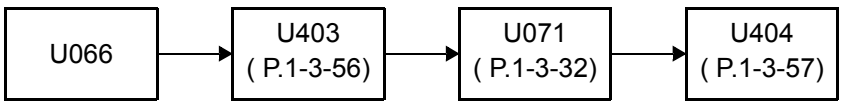

Completion
Press the stop key. The screen for selecting a maintenance item No. is displayed.

Item No.	Description
U067	**Adjusting the scanner center line**

Description
Adjusts the scanner center line of the original scanning.
Purpose
Make the adjustment if there is a regular error between the center lines of the copy image and original.

Adjustment
1. Press the start key.
2. Press the system menu key.
3. Place an original and press the start key to make a test copy.
4. Press the system menu key.
5. Select the item to be adjusted.l

Display	Description	Setting range	Initial setting	Change in value per step
Front	Scanner center line	-40 to 40	0	0.085 mm
Rotate	Scanner center line (rotate copying)	-40 to 40	0	0.085 mm

6. Change the setting value using the cursor left/right keys or numeric keys.
   For copy example 1, increase the value. For copy example 2, decrease the value.

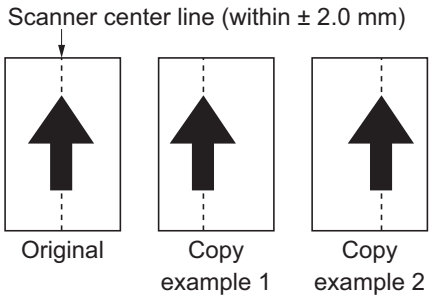

Figure 1-3-9

7. Press the start key. The value is set.

Caution
Check the copy image after the adjustment. If the image is still incorrect, perform the following adjustments in maintenance mode.

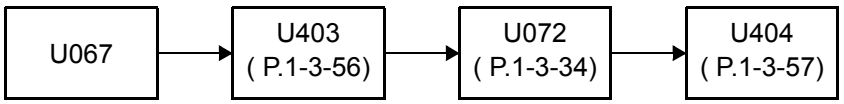

Completion
Press the stop key. The screen for selecting a maintenance item No. is displayed.

Item No.	Description
U068	**Adjusting the scanning position for originals from the DP** **Description** Adjusts the position for scanning originals from the DP. Performs the test copy at the four scanning positions after adjusting. **Purpose** Used when the image fogging occurs because the scanning position is not proper when the DP is used. Run U071 to adjust the timing of DP leading edge when the scanning position is changed. **Setting** 1. Press the start key.l

Display	Description	Setting range	Initial setting	Change in value per step
DP Read	Starting position adjustment for scanning originals	-55 to 55	0	0.091 mm
Black Line	Scanning position for the test copy originals	0 to 3	0	-

2. Select [DP Read].
3. Change the setting using the cursor left/right keys or numeric keys.
   When the setting value is increased, the scanning position moves to the right and it moves to the left when the setting value is decreased.
4. Press the start key. The value is set.
5. Select [Black Line].
6. Change the setting using the cursor left/right keys or numeric keys.
7. Press the start key. The value is set.
8. Set the original (the one which density is known) in the DP and press the system menu key.
9. Press the start key. Test copy is executed.
10. Perform the test copy at each scanning position with the setting value from 0 to 3 and check that no black line appears and the image is normally scanned.

Completion
Press the stop key. The screen for selecting a maintenance item No. is displayed.

Item No.	Description
U070	**Adjusting the DP magnification**

Description
Adjusts the DP original scanning speed.
Purpose
Make the adjustment if the magnification is incorrect in the auxiliary scanning direction when the DP is used.

Adjustment
1. Press the start key.
2. Press the system menu key.
3. Place an original on the DP and press the start key to make a test copy.
4. Press the system menu key.
5. Select the item to be adjusted.l

Display	Description	Setting range	Initial setting	Change in value per step
Y Scan Zoom	Magnification in the main scanning direction	-25 to 25	0	0.1 %
X Scan Zoom	Magnification in the auxiliary scanning direction	-25 to 25	0	0.1 %

Adjustment: [Y Scan Zoom]
1. Change the setting value using the cursor left/right keys or numeric keys.
   For copy example 1, increase the value. For copy example 2, decrease the value.

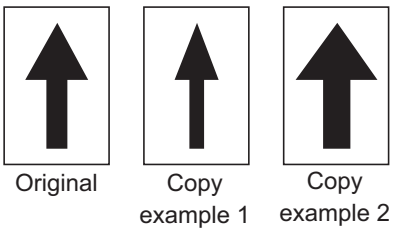

Figure 1-3-10

2. Press the start key. The value is set.

Adjustment: [X Scan Zoom]
1. Change the setting value using the cursor left/right keys or numeric keys.
   For copy example 1, increase the value. For copy example 2, decrease the value.

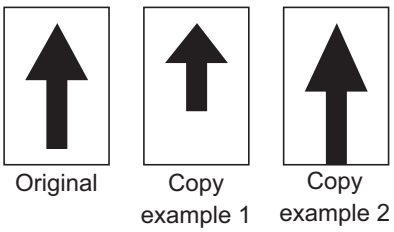

Figure 1-3-11

2. Press the start key. The value is set.

Item No.	Description
U070	**Caution** Check the copy image after the adjustment. If the image is still incorrect, perform the following adjustments in maintenance mode. U070 → U071 (P.1-3-32) → U404 (P.1-3-57) **Completion** Press the stop key. The screen for selecting a maintenance item No. is displayed.

Item No.	Description
U071	

Adjusting the DP scanning timing

Description
Adjusts the DP original scanning timing.
Purpose
Make the adjustment if there is a regular error between the leading or trailing edges of the original and the copy image when the DP is used.

Method
1. Press the start key.
2. Press the system menu key.
3. Place an original on the DP and press the start key to make a test copy.
4. Press the system menu key.
5. Select the item to be adjusted.l

Display	Description	Setting range	Initial setting	Change in value per step
Front Head	Leading edge registration (first side)	-66 to 66	0	0.085 mm
Front Tail	Trailing edge registration (first side)	-66 to 66	0	0.085 mm
Back Head	Leading edge registration (second side)	-66 to 66	0	0.085 mm
Back Tail	Trailing edge registration (second side)	-66 to 66	0	0.085 mm

Adjustment: Leading edge registration
1. Change the setting value using the cursor left/right keys or numeric keys.
   For copy example 1, increase the value. For copy example 2, decrease the value.

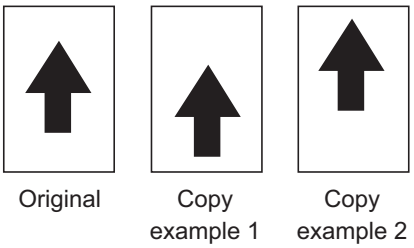

Figure 1-3-12

2. Press the start key. The value is set.

Caution
If the first side is adjusted, check the second side and if adjustment is required, carry out the adjustment.
Check the copy image after the adjustment. If the image is still incorrect, perform the following adjustments in maintenance mode.

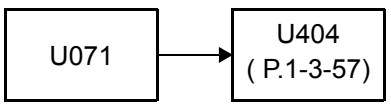

Item No.	Description
U071	**Adjustment: Trailing edge registration** 1. Change the setting value using the cursor left/right keys or numeric keys. For copy example 1, increase the value. For copy example 2, decrease the value. 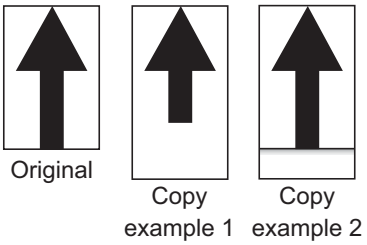 **Figure 1-3-13** 2. Press the start key. The value is set. **Caution** If the first side is adjusted, check the second side and if adjustment is required, carry out the adjustment. Check the copy image after the adjustment. If the image is still incorrect, perform the following adjustments in maintenance mode. U071 → U404 (P.1-3-57) **Completion** Press the stop key. The screen for selecting a maintenance item No. is displayed.

Item No.	Description
U072	**Adjusting the DP center line**

Description
Adjusts the scanning start position for the DP original.
Purpose
Make the adjustment if there is a regular error between the centers of the original and the copy image when the DP is used.

Adjustment
1. Press the start key.
2. Press the system menu key.
3. Place an original on the DP and press the start key to make a test copy.
4. Press the system menu key.
5. Select the item to be adjusted.l

Display	Description	Setting range	Initial setting	Change in value per step
Front	DP center line (first side)	-40 to 40	0	0.085 mm
Back	DP center line (second side)	-40 to 40	0	0.085 mm

6. Change the setting value using the cursor left/right keys or numeric keys.
   For copy example 1, increase the value. For copy example 2, decrease the value.

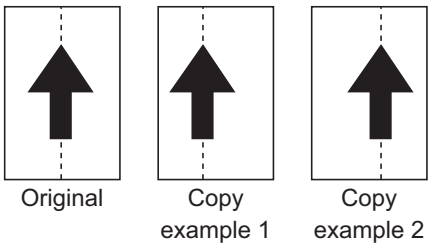

Figure 1-3-14

7. Press the start key. The value is set.

Caution
If the first side is adjusted, check the second side and if adjustment is required, carry out the adjustment.
Check the copy image after the adjustment. If the image is still incorrect, perform the following adjustments in maintenance mode.

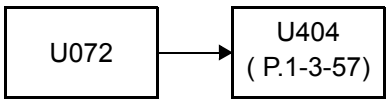

Completion
Press the stop key. The screen for selecting a maintenance item No. is displayed.

Item No.	Description
U089	**Outputting a MIP-PG pattern** **Description** Selects and outputs the MIP-PG pattern created in the machine. **Purpose** To check copier status other than scanner when adjusting image printing, using MIP-PG pattern output (with-out scanning). **Method** 1. Press the start key. 2. Select the MIP-PG pattern to be output and press the start key. **Display** / **PG pattern to be output** / **Purpose** Gray Scale /  / To check the laser scanner unit engine output characteristics Mono1 (Output density: 0) / 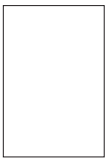 / To check the drum quality Mono4 (Output density: 70) /  / To check the drum quality 256-Level / 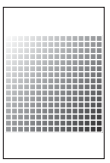 / To check resolution reproducibility in printing 3. Press the system menu key. 4. Press the start key. A MIP-PG pattern is output. **Completion** Press the stop key. The screen for selecting a maintenance item No. is displayed.

Item No.	Description
U099	**Adjusting original size detection** **Description** Checks the operation of the original size sensor and sets the sensing threshold value. **Purpose** To adjust the sensitiveness of the sensor and size judgement time if the original size sensor malfunctions frequently due to incident light or the like. **Method** 1. Press the start key. 2. Select the item. The screen for executing each item is displayed.

Display	Description
Data1	Displaying original size sensor transmission data
B/W Level1	B/W LEVEL setting original size sensor threshold value Setting original size judgment time
Data2	Displaying original size sensor transmission data (when DP is installed)

Method: [Data1/Data2]

1. Place the original and close the original cover or DP. The detection sensor transmission data is displayed.

Display	Description
Original Area R	Detected original width size (R)
Original Area G	Detected original width size (G)
Original Area B	Detected original width size (B)
Original Area	Detected original width size
Size SW L	Displays the original size sensor (OSS) ON/OFF

<table>
<tr><th>Item No.</th><th>Description</th></tr>
<tr><td>U099</td><td>

Setting: [B/W Level1]

1. Select an item to be set.
2. Change the setting value using the cursor left/right keys or numeric keys.l

<table>
<tr><th>Display</th><th>Description</th><th>Setting range</th><th colspan="2">Initial setting</th></tr>
<tr><td>Original R1 - 3</td><td>Original threshold value for color R</td><td>0 to 255</td><td>40/30/20</td><td>50/50/50*</td></tr>
<tr><td>Original G1 - 3</td><td>Original threshold value for color G</td><td>0 to 255</td><td>40/30/20</td><td>50/50/50*</td></tr>
<tr><td>Original B1 - 3</td><td>Original threshold value for color B</td><td>0 to 255</td><td>40/30/20</td><td>50/50/50*</td></tr>
<tr><td>Light Source R</td><td>Light source threshold value for color R</td><td>0 to 255</td><td>19</td><td>49*</td></tr>
<tr><td>Light Source G</td><td>Light source threshold value for color G</td><td>0 to 255</td><td>19</td><td>49*</td></tr>
<tr><td>Light Source B</td><td>Light source threshold value for color B</td><td>0 to 255</td><td>19</td><td>49*</td></tr>
<tr><td>Wait Time</td><td>Time from activation of the original detection switch (ODSW) to original size judgment</td><td>0 to 255</td><td>150</td><td>150*</td></tr>
</table>

*: When DP is installed.

3. Press the start key. The value is set.

Completion

Press the stop key. The screen for maintenance item No. is displayed.

</td></tr>
<tr><td>U100</td><td>

Setting the main high voltage

Description

Performs main charging.

Purpose

To check main charging.

Method

1. Press the start key.
2. Select [Main Charger].
3. Press the start key. Turning the main charger on.
4. To stop operation, press the stop key.

Completion

Press the stop key when main charger output stops. The screen for selecting a maintenance item No. is displayed.

</td></tr>
</table>

Item No.	Description
U101	**Setting the voltage for the primary transfer** **Description** Sets the control voltage for the primary transfer. **Purpose** To change the setting when any density problems, such as too dark or light, occur. **Setting** 1. Press the start key. 2. Select the item to be set. 3. Change the setting value using the cursor left/right keys or numeric keys.

Display	Description	Setting range	Initial setting
Timing	Transfer bias ON timing at leading edge of paper	-100 to 100	0
Bias(L)	Transfer bias for large sizes (more than 220 mm wide)	100 to 2000	650
Bias(M)	Transfer bias for medium sizes (more than 170 to under 220 mm wide)	100 to 2000	900
Bias(S)	Transfer bias for small sizes (under 170 mm wide)	100 to 2000	1100

Increasing the setting makes the transfer voltage higher, and decreasing it makes the voltage lower.

4. Press the start key. The value is set.

Completion
Press the stop key. The screen for selecting a maintenance item No. is displayed.

U108

Setting separation shift bias

Description
Adjusts output of separation shift bias and ON/OFF timing.
Purpose
To set when the separated malfunction of the paper occurs.

Setting
1. Press the start key.
2. Select [Mode].
3. Change the setting value using the cursor left/right keys or numeric keys.

Display	Description	Setting range	Initial setting
Mode	ON/OFF timing adjustment with paper position	1 to 5	4

4. Press the start key. The value is set.

Completion
Press the stop key. The screen for selecting a maintenance item No. is displayed.

<table>
<tr><th>Item No.</th><th>Description</th></tr>
<tr><td>U111</td><td>

Checking the drum drive time

Description
Displays the drum drive time for checking a figure, which is used as a reference when correcting the high voltage based on time.
Purpose
To check the drum status.

Method
1. Press the start key. The drum drive time is displayed.

Completion
Press the stop key. The screen for selecting a maintenance item No. is displayed.

</td></tr>
<tr><td>U118</td><td>

Displaying the drum history

Description
Displays the past record of machine number and the drum counter.
Purpose
To check the count value of machine number and the drum counter.

Method
1. Press the start key. The each history displayed by five cases.

<table>
<tr><th>Display</th><th>Description</th></tr>
<tr><td>Machine History 1 - 5</td><td>Historical records of the machine number</td></tr>
<tr><td>Cnt History 1 - 5</td><td>Historical records of drum counter</td></tr>
</table>

Completion
Press the stop key. The screen for selecting a maintenance item No. is displayed.

</td></tr>
</table>

<table>
<tr><th>Item No.</th><th>Description</th></tr>
<tr><td>U127</td><td>

Checking/clearing the transfer count

Description
Displays and clears the counts of the transfer counter.
Purpose
To check the count after replacement of the transfer roller. Also to clear the counts after replacing transfer roller.

Method
1. Press the start key. The current counts of the transfer counter is displayed.

Clearing
1. Select [Clear].
2. Press the start key. The counter value is cleared.

Setting
1. Change the counter value using the cursor left/right keys or numeric keys.
2. Press the start key. The counter value is set.

Completion
Press the stop key. The screen for selecting a maintenance item No. is displayed.

</td></tr>
<tr><td>U140</td><td>

Displaying developer bias

Description
Displays various developer bias value.
Purpose
To check the developer bias value.

Setting
1. Press the start key.
2. Select the item to be set.
3. Change the setting value using the cursor left/right keys or numeric keys.

<table>
<tr><th>Display</th><th>Description</th><th>Setting range</th><th>Initial setting</th></tr>
<tr><td>Bias</td><td>Developer magnet roller bias</td><td>0 to 255</td><td>170</td></tr>
<tr><td>Clock</td><td>Developer magnet roller frequency</td><td>0 to 255</td><td>2700</td></tr>
<tr><td>Duty</td><td>Developer magnet roller duty</td><td>0 to 255</td><td>60</td></tr>
</table>

4. Press the start key. The value is set.

Completion
Press the stop key. The screen for selecting a maintenance item No. is displayed.

</td></tr>
</table>

<table>
<tr><th>Item No.</th><th>Description</th></tr>
<tr><td>U147</td><td>

Setting for toner applying operation

Description
Sets the mode for removing charged toner in the developer unit (T7 control: Toner applying operation).
Purpose
Changing settings are not required. However, when the documents with lower print density (e.g. less than 2%) should customarily printed in a great volume, mode must be changed.
If the charged toner stays inside the developer unit, density decreases.

Setting
1. Press the start key
2. Select the item to be set.

Display	Description
Mode0	Normal mode
Mode1	Toner consumption mode

* : Initial setting; Mode1

3. Press the start key. The setting is set.

Completion
Press the stop key. The screen for selecting a maintenance item No. is displayed.

</td></tr>
<tr><td>U150</td><td>

Checking sensors for toner

Description
Displays the on-off status of each sensor or switch related to toner.
Purpose
To check if the sensors and switches operate correctly.

Method
1. Press the start key.
2. Turn each switch or sensor on and off manually to check the status.
When a switch or sensor is detected to be in the ON position, the display for that switch or sensor will be “1”

Display	Switches and sensors
Container Set	Toner container switch (TCSW)
Container Sensor	Toner sensor (TS)
Waste Box Sensor	Waste toner sensor (WTS)
Motor	Main motor (MM) is turned on

3. To stop motor driving, press the stop key.

Completion
Press the stop key. The screen for selecting a maintenance item No. is displayed.

</td></tr>
</table>

<table>
<tr><th>Item No.</th><th>Description</th></tr>
<tr><td>U157</td><td>

Checking the developer drive time

Description
Displays the developer drive time for checking a figure, which is used as a reference when correcting the toner control.
Purpose
To check the developer drive time after replacing the developer unit.

Method
1. Press the start key. The developer drive time of each color is displayed.

Completion
Press the stop key. The screen for selecting a maintenance item No. is displayed.

</td></tr>
<tr><td>U161</td><td>

Setting the fuser control temperature

Description
Changes the fuser control temperature.
Purpose
Normally no change is necessary. However, can be used to prevent curling or creasing of paper, or solve a fuser problem on thick paper.

Setting
1. Press the start key.
2. Select the item to be set.
3. Change the setting value using the cursor left/right keys.

<table>
<tr><th>Display</th><th>Description</th><th>Setting range</th><th>Initial setting</th></tr>
<tr><td>Drive Start</td><td>Driving start temperature when warm-up starts</td><td>100 to 200(°C)</td><td>135</td></tr>
<tr><td>Ready</td><td>Control temperature for displaying [Ready for printing.]</td><td>100 to 200(°C)</td><td>150</td></tr>
<tr><td>Print</td><td>Control temperature during printing</td><td>100 to 200(°C)</td><td>165</td></tr>
</table>

4. Press the start key. The value is set.

Completion
Press the stop key. The screen for selecting a maintenance item No. is displayed.

</td></tr>
</table>

<table>
<tr><th>Item No.</th><th>Description</th></tr>
<tr><td>U199</td><td>

Displaying fuser heater temperature

Description
Displays the detected fuser temperature.
Purpose
To check the fuser temperature.

Method
1. Press the start key. The fuser temperature is displayed.

Completion
Press the stop key. The screen for selecting a maintenance mode No. is displayed.

</td></tr>
<tr><td>U201</td><td>

Initializing the touch panel

Description
Automatically correct the positions of the X- and Y-axes of the touch panel.
Purpose
To automatically correct the display positions on the touch panel after it is replaced.

Method
1. Press the start key.
2. Select the [Initialize] or [Check].

<table>
<tr><th>Display</th><th>Description</th></tr>
<tr><td>Initialize</td><td>Adjusts the display on the panel automatically</td></tr>
<tr><td>Check</td><td>Checks the display on the touch panel</td></tr>
</table>

Method: [Initialize]
1. Press the start key.
2. Press the center of the + keys. Be sure to press three + keys displayed in order.
   The touch panel is adjusted automatically.
3. Press the indicated three + keys, and then check the display.
4. Press the stop key. The screen for selecting a maintenance item No. is displayed.

Method: [Check]
1. Press the start key.
2. Press the indicated three + keys, and then check the display.
   When adjusting the display, press [Initialize] to execute the adjustment automatically.
3. Press the stop key. The screen for selecting a maintenance item No. is displayed.

Completion
Press the stop key. The screen for selecting a maintenance item No. is displayed.

</td></tr>
</table>

Item No.	Description
U203	**Checking DP operation** **Description** Simulates the original conveying operation separately in the DP. **Purpose** To check the DP operation. **Method** 1. Press the start key. 2. Place an original in the DP if running this simulation with paper. 3. Select the speed to be operated. **Display** / **Description** Normal Speed — Normal reading (600 dpi) High Speed — High-speed reading 4. Select the item to be operated. **Display** / **Description** CCD ADP (Non-P) — Without paper, single-sided original of CCD (continuous operation) CCD ADP — With paper, single-sided original of CCD CCD RADP (Non-P) — Without paper, double-sided original of CCD (continuous operation) CCD RADP — With paper, double-sided original of CCD 5. Press the start key. The operation starts. 6. To stop continuous operation, press the stop key. **Completion** Press the stop key. The screen for selecting a maintenance item No. is displayed.

<table>
<tr><th>Item No.</th><th>Description</th></tr>
<tr><td>U207</td><td>

Checking the operation panel keys

Description
Checks operation of the operation panel keys.
Purpose
To check operation of all the keys and LEDs on the operation panel.

Method
1. Press the start key. The screen for executing is displayed.
2. [Count0] is displayed and the leftmost LED on the operation panel lights.
3. As the keys lined up in the same line as the lit indicator are pressed in the order from the top to the bottom, the figure shown on the touch panel increases in increments of 1. When all the keys in that line are pressed and if there are any LEDs corresponding to the keys in the line on the immediate right, the top LED in that line will light.
4. When all the keys on the operation panel have been pressed, all the LEDs light for up to 10 seconds.

Completion
Press the stop key. The screen for selecting a maintenance item No. is displayed.

</td></tr>
<tr><td>U222</td><td>

Setting the IC card type

Description
Sets the type of IC card.
Purpose
To change the type of IC card.

Setting
1. Press the start key.
2. Select the item.

<table>
<tr><th>Display</th><th>Description</th></tr>
<tr><td>Other</td><td>The type of IC card is SSFC.</td></tr>
<tr><td>SSFC</td><td>The type of IC card is not SSFC.</td></tr>
</table>

* : Initial setting: Other

3. Press the start key. The setting is set.

Completion
Press the stop key. The screen for selecting a maintenance item No. is displayed.

</td></tr>
</table>

Item No.	Description
U243	**Checking the operation of the DP motors** **Description** Turns the motors or clutches in the DP on. **Purpose** To check the operation of the DP motors and clutches. **Method** 1. Press the start key. 2. Select the item to be operated. 3. Press the start key. The operation starts. **Display** / **Description** Conv Motor — DP paper feed motor (DPPFM) is turned on Rev Motor — DP switchback motor (DPSBM) is turned on Feed Clutch — DP paper feed clutch (DPPFCL) is turned on Regist Clutch — DP registration clutch (DPRCL) is turned on 4. To turn each motor off, press the stop key. **Completion** Press the stop key when operation stops. The screen for selecting a maintenance item No. is displayed.

Item No.	Description
U244	**Checking the DP switches** **Description** Displays the status of the respective switches in the DP. **Purpose** To check if respective switches in the DP operate correctly. **Method** 1. Press the start key. 2. Turn each switch or sensor on and off manually to check the status. When a switch or sensor is detected to be in the ON position, the display for that switch or sensor will be “1”.

Display	Switches and sensors
Switch 00000000	
1st digit	DP interlock switch (DPILSW)
2nd digit	DP open/close sensor (DPOCS)
3rd digit	DP paper feed sensor (DPPFS)
4th digit	DP registration sensor (DPRS)
5th digit	DP timing sensor (DPTS)
6th digit	DP original sensor (DPOS)
7th digit	DP original size length sensor (DPOLS)
8th digit	-

Completion
Press the stop key. The screen for selecting a maintenance item No. is displayed.

<table>
<tr><th>Item No.</th><th>Description</th></tr>
<tr><td>U250</td><td>

Checking/clearing the maintenance cycle

Description
Changes preset values for maintenance cycle and automatic grayscale adjustment.
Purpose
Provides changing the time when the message to acknowledge to conduct maintenance and automatic grayscale adjustment is periodically displayed.

Setting
1. Press the start key.
2. Select the item to be changed.
3. Change the setting using the cursor left/right keys or numeric keys.

<table>
<tr><th>Display</th><th>Description</th><th>Setting range</th></tr>
<tr><td>M.Cnt A</td><td>Preset values for maintenance cycle</td><td>0 to 9999999</td></tr>
<tr><td>M.Cnt HT</td><td>Preset values for automatic grayscale adjustment</td><td>0 to 9999999</td></tr>
</table>

4. Press the start key. The setting value is set.

Clearing
1. Select [Clear].
2. Press the start key. The setting value is cleared.

Completion
Press the stop key. The screen for selecting a maintenance item No. is displayed.

</td></tr>
<tr><td>U251</td><td>

Checking/clearing the maintenance counter

Description
Displays and clears or changes the maintenance count and automatic grayscale adjustment count.
Purpose
To verify the maintenance counter count and automatic grayscale count. Also to clear the count during maintenance service.

Setting
1. Press the start key.
2. Select the item to be changed.
3. Change the setting using the cursor left/right keys or numeric keys.

<table>
<tr><th>Display</th><th>Description</th><th>Setting range</th></tr>
<tr><td>M.Cnt A</td><td>Count value for maintenance cycle</td><td>0 to 9999999</td></tr>
<tr><td>M.Cnt HT</td><td>Automatic grayscale adjustment count</td><td>0 to 9999999</td></tr>
</table>

4. Press the start key. The setting value is set.

Clearing
1. Select [Clear].
2. Press the start key. The setting value is cleared.

Completion
Press the stop key. The screen for selecting a maintenance item No. is displayed.

</td></tr>
</table>

Item No.	Description
U252	**Setting the destination** **Description** Switches the operations and screens of the machine according to the destination. **Purpose** To be executed after initializing the backup RAM, in order to return the setting to the value before replacement or initialization. **Method** 1. Press the start key. 2. Select the destination. **Display** / **Description** Japan Metric — Metric (Japan) specifications Inch — Inch (North America) specifications Europe Metric — Metric (Europe) specifications Asia Pacific — Metric (Asia Pacific) specifications Australia — Australia specifications China — China specifications Korea — Korea specifications 3. Press the start key. 4. Turn the main power switch off and on. * : An error code is displayed in case of an initialization error. When errors occurred, turn main power switch off then on, and execute initialization using maintenance item U252. **Error codes** **Codes** / **Description** 0001 — Entity error 0002 — Controller error 0003 — OS error 0020 — Engine error 0040 — Scanner error

<table>
<tr><th>Item No.</th><th>Description</th></tr>
<tr><td>U253</td><td>

Switching between double and single counts

Description
Switches the count system for the total counter and other counters.
Purpose
Used to select, according to the preference of the user (copy service provider), if folio size paper is to be counted as one sheet (single count) or two sheets (double count).

Setting
1. Press the start key.
2. Select [B/W].
3. Select the count system.

Display	Description
SGL (All)	Single count for all size paper
DBL (A3/Ledger)	Double count for A3/Ledger size or larger
DBL (B4)	Double count for B4 size or larger
DBLFolio)	Double count for Folio size or larger

* : Initial setting: DBL (A3/Ledger)

4. Press the start key. The setting is set.

Completion
Press the stop key. The screen for selecting a maintenance item No. is displayed.

</td></tr>
<tr><td>U260</td><td>

Selecting the timing for copy counting

Description
Changes the copy count timing for the total counter and other counters.
Purpose
To be set according to user request.

Setting
1. Press the start key.
2. Select the copy count timing.

Display	Description
Feed	When secondary paper feed starts
Eject	When the paper is ejected

* : Initial setting: Eject

3. Press the start key. The setting is set.

Completion
Press the stop key. The screen for selecting a maintenance item No. is displayed.

</td></tr>
</table>

Item No.	Description
U285	**Setting service status page** **Description** Determines displaying the print coverage report on reporting. **Purpose** According to user request, changes the setting. **Setting** 1. Press the start key. 2. Select [On] or [Off]. **Display** / **Description** On / Displays the print coverage Off / Not to display the print coverage * : Initial setting: On 3. Press the start key. The setting is set. **Completion** Press the stop key. The screen for selecting a maintenance item No. is displayed.

Item No.	Description
U326	**Setting the black line cleaning indication** **Description** Sets whether to display the cleaning guidance when detecting the black line. **Purpose** Displays the cleaning guidance in order to make the call for service with the black line decrease by the rubbish on the contact glass when scanning from the DP. **Method** 1. Press the start key. 2. Select the item to set. The screen for setting each item is displayed. **Display** / **Description** Black Line Mode — Black line cleaning guidance ON/OFF setting Black Line Cnt — Setting counts of the cleaning guidance indication **Setting: [Black Line Mode]** 1. Select [On] or [Off]. **Display** / **Description** On — Displays the cleaning guidance Off — Not to display the cleaning guidance * : Initial setting: On 2. Press the start key. The setting is set. **Setting: [Black Line Cnt]** 1. Select [Cnt]. 2. Change the setting value using the cursor left/right keys or numeric keys. **Display** / **Description** / **Setting range** / **Initial setting** Cnt — Setting counts of the cleaning guidance indication (x 1000 sheets) — 0 to 255 — 8 * : When setting is 0, the black line cleaning indication is displayed only if the black line is detected. 3. Press the start key. The value is set. **Completion** Press the stop key. The screen for selecting a maintenance item No. is displayed.

<table>
<tr><th>Item No.</th><th>Description</th></tr>
<tr><td>U332</td><td>

Setting the size conversion factor

Description
Sets the coefficient of nonstandard sizes in relation to the A4/Letter size. The coefficient set here is used to convert the black ratio in relation to the A4/Letter size and to display the result in user simulation.
Purpose
To set the coefficient for converting the black ratio for nonstandard sizes in relation to the A4/Letter size.

Setting
1. Press the start key.
2. Select [Rate].
3. Change the setting using the cursor left/right keys or numeric keys.

Display	Description	Setting range	Initial setting
Rate	Size parameter	0.1 to 3.0	1.0

4. Press the start key. The value is set.

Completion
Press the stop key. The screen for selecting a maintenance item No. is displayed.

</td></tr>
<tr><td>U341</td><td>

Specific paper feed location setting for printing function

Description
Sets a paper feed location specified for printer output.
Purpose
To use a paper feed location only for printer output.
A paper feed location specified for printer output cannot be used for copy output.

Method
1. Press the start key.
2. Select the paper feed location for the printer.
3. Select [On] or [Off] using the cursor left/right keys.

Display	Description
Cassette1	Cassette 1
Cassette2	Cassette 2 (optional paper feeder)
Cassette3	Cassette 3 (optional paper feeder)

* : When an optional paper feed device is not installed, the corresponding count is not displayed.

4. Press the start key. The setting is set.

Completion
Press the stop key. The screen for selecting a maintenance item No. is displayed.

</td></tr>
</table>

<table>
<tr><th>Item No.</th><th>Description</th></tr>
<tr><td>U343</td><td>

Switching between duplex/simplex copy mode

Description
Switches the initial setting between duplex and simplex copy.
Purpose
To be set according to frequency of use: set to the more frequently used mode.

Setting
1. Press the start key.
2. Select [On] or [Off].

Display	Description
On	Duplex copy
Off	Simplex copy

* : Initial setting: Off

3. Press the start key. The setting is set.

Completion
Press the stop key. The screen for selecting a maintenance item No. is displayed.

</td></tr>
<tr><td>U345</td><td>

Setting the value for maintenance due indication

Description
Sets when to display a message notifying that the time for maintenance is about to be reached, by setting the number of copies that can be made before the current maintenance cycle ends. When the difference between the number of copies of the maintenance cycle and that of the maintenance count reaches the set value, the message is displayed.
Purpose
To change the time for maintenance due indication.

Setting
1. Press the start key.
2. Select [Cnt].
3. Change the setting using the cursor left/right keys or numeric keys.

Display	Description	Setting range	Initial setting
Cnt	Time for maintenance due indication (Remaining number of copies that can be made before the current maintenance cycle ends)	0 to 9999	0

4. Press the start key. The value is set.

Clearing
1. Select [Clear].
2. Press the start key. The value is cleared.

Completion
Press the stop key. The screen for selecting a maintenance item No. is displayed.

</td></tr>
</table>

Item No.	Description
U402	**Adjusting margins of image printing**

Description
Adjusts margins for image printing.
Purpose
Make the adjustment if margins are incorrect.

Adjustment
1. Press the start key.
2. Press the system menu key.
3. Press the start key to output a test pattern.
4. Press the system menu key.
5. Select the item to be adjusted.

Display	Description	Setting range	Initial setting	Change in value per step
Lead	Printer leading edge margin	0 to 10.0	3.0	0.1 mm
A Margin	Printer left margin	0 to 10.0	2.5	0.1 mm
C Margin	Printer right margin	0 to 10.0	2.5	0.1 mm
Trail	Printer trailing edge margin	0 to 10.0	5.0	0.1 mm

6. Change the setting value using the cursor left/right keys or numeric keys.
   Increasing the value makes the margin wider, and decreasing it makes the margin narrower.

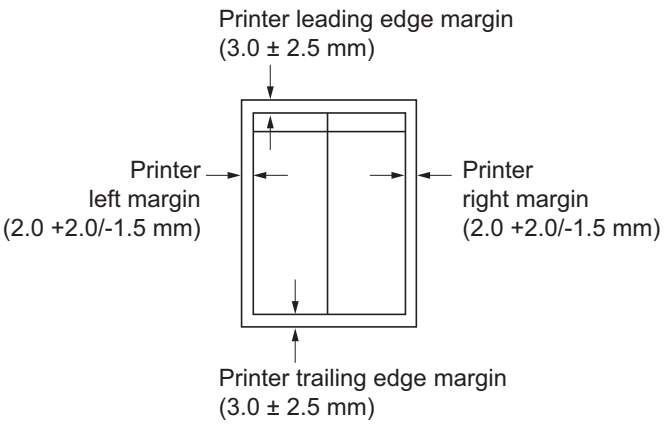

Figure 1-3-15

7. Press the start key. The value is set.

Caution
Check the copy image after the adjustment. If the image is still incorrect, perform the following adjustments in maintenance mode.

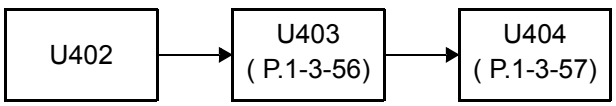

Completion
Press the stop key. The screen for selecting a maintenance item No. is displayed.

Item No.	Description
U403	**Adjusting margins for scanning an original on the contact glass**

Description
Adjusts margins for scanning the original on the contact glass.
Purpose
Make the adjustment if margins are incorrect.

Adjustment
1. Press the start key.
2. Press the system menu key.
3. Place an original and press the start key to make a test copy.
4. Press the system menu key.
5. Select the item to be adjusted.

Display	Description	Setting range	Initial setting	Change in value per step
A Margin	Scanner left margin	0 to 10.0	2.0	0.5 mm
B Margin	Scanner leading edge margin	0 to 10.0	2.0	0.5 mm
C Margin	Scanner right margin	0 to 10.0	2.0	0.5 mm
D Margin	Scanner trailing edge margin	0 to 10.0	2.0	0.5 mm

6. Change the setting value using the cursor left/right keys or numeric keys.
   Increasing the value makes the margin wider, and decreasing it makes the margin narrower.

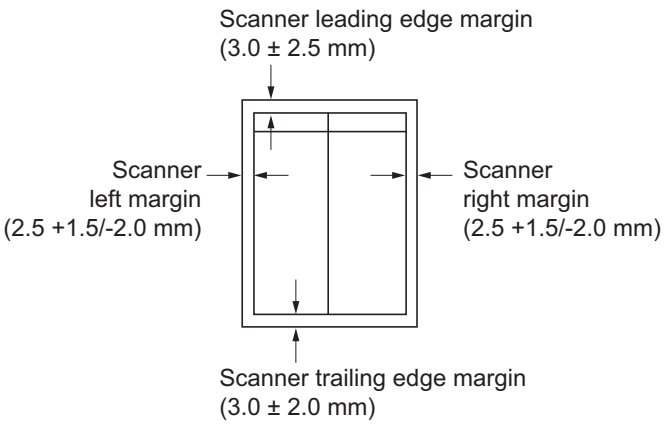

Figure 1-3-16

7. Press the start key. The value is set.

Caution
Check the copy image after the adjustment. If the image is still incorrect, perform the following adjustments in maintenance mode.

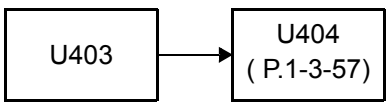

Completion
Press the stop key. The indication for selecting a maintenance item No. appears.

Item No.	Description
U404	**Adjusting margins for scanning an original from the DP**

Description
Adjusts margins for scanning the original from the DP.
Purpose
Make the adjustment if margins are incorrect.

Caution
Before making this adjustment, ensure that the following adjustments have been made in maintenance mode

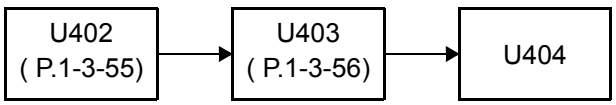

Adjustment
1. Press the start key.
2. Press the system menu key.
3. Place an original on the DP and press the start key to make a test copy.
4. Press the system menu key.
5. Select the item to be adjusted.

Display	Description	Setting range	Initial setting	Change in value per step
A Margin	DP left margin	0 to 10.0	3.0	0.5 mm
B Margin	DP leading edge margin	0 to 10.0	2.5	0.5 mm
C Margin	DP right margin	0 to 10.0	3.0	0.5 mm
D Margin	DP trailing edge margin	0 to 10.0	4.0	0.5 mm

6. Change the setting value using the cursor left/right keys or numeric keys.
   Increasing the value makes the margin wider, and decreasing it makes the margin narrower.

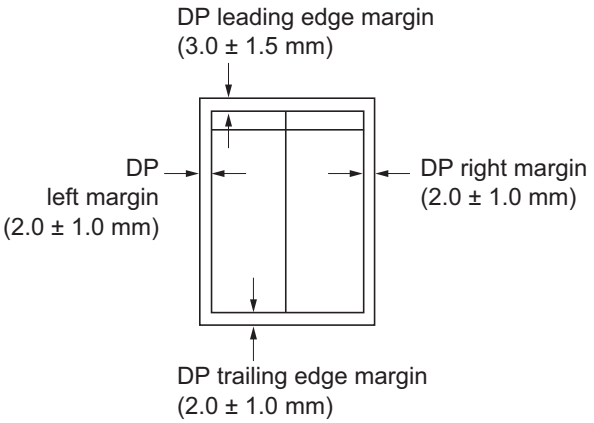

Figure 1-3-17

7. Press the start key. The value is set.

Completion
Press the stop key. The screen for selecting a maintenance item No. is displayed.

Item No.	Description
U407	**Adjusting the leading edge registration for memory image printing**

Description
Adjusts the leading edge registration during memory copying.
Purpose
Make the following adjustment if there is a regular error between the leading edge of the copy image on the front face and that on the reverse face during duplex switchback copying.

Caution
Before making this adjustment, ensure that the following adjustments have been made in maintenance mode

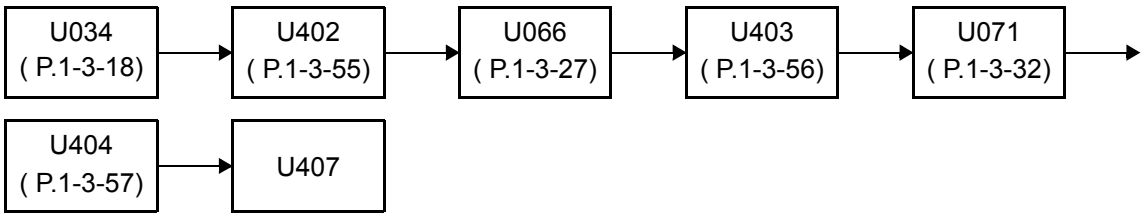

Adjustment
1. Press the start key.
2. Press the system menu key.
3. Place an original and press the start key to make a test copy.
4. Press the system menu key.
5. Select [Adj Data].

Display	Description	Setting range	Initial setting	Change in value per step
Adj Data	Leading edge registration for memory image printing	-47 to 47	0	0.1 mm

6. Change the setting value using the cursor left/right keys or numeric keys.
   For copy example 1, decrease the value. For copy example 2, increase the value.

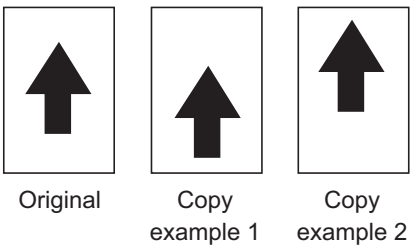

Figure 1-3-18

7. Press the start key. The value is set.

Completion
Press the stop key. The screen for selecting a maintenance item No. is displayed.

Item No.	Description
U411	**Adjusting the scanner automatically** **Description** Uses a specified original and automatically adjusts the following items in the scanner and the DP scanning sections. Scanner section: Original size magnification, leading edge timing, center line, input gamma, input gamma in monochrome mode and matrix DP scanning section: Original size magnification, leading edge timing, center line **Purpose** To perform automatic adjustment of various items in the scanner and the DP scanning sections. **Method** 1. Press the start key. 2. Select the item.

Display	Description	Original to be used for adjustment (P/N)
Table	Automatic adjustment in the scanner section	7505000005
DP	Automatic adjustment in the DP scanning section:	303LJ57010
All	Performs automatic adjustment in the DP scanning section following automatic adjustment in the scanner section	7505000005/ 303LJ57010
Target	Set-up for obtaining the target value	-

Method: Table

To manually enter the target value

1. Enter the target values which are shown on the specified original (P/N: 7505000005) executing maintenance item U425.
2. Set a specified original (P/N: 7505000005) on the platen.
3. Enter maintenance item U411.
4. Select [Target].
5. Select [U425] using the cursor left/right keys.
6. Select [Table].
7. Press the start key. Auto adjustment starts.

To manually enter the target value

The accuracy of adjustment is worse than the manual entry.

1. Set a specified original (P/N: 7505000005) on the platen.
2. Enter maintenance item U411.
3. Select [Target].
4. Select [Auto] using the cursor left/right keys.
5. Select [Table].
6. Press the start key. Auto adjustment starts.

* : When automatic adjustment has normally completed, [OK] is displayed. If a problem occurs during auto adjustment, [NG XX] (XX is replaced by an error code) is displayed and operation stops. Should this happen, determine the details of the problem and repeat the procedure from the beginning.

Item No.	Description
U411	**Method: DP** 1. Select [DP]. 2. Set a specified original (P/N: 303LJ57010) in the DP. 3. Press the start key. Auto adjustment starts. * : When automatic adjustment has normally completed, [OK] is displayed. If a problem occurs during auto adjustment, [NG XX] (XX is replaced by an error code) is displayed and operation stops. Should this happen, determine the details of the problem and repeat the procedure from the beginning. **Error Codes**

Codes	Description
00	Automatic adjustment success
01	Black band detection error (scanner leading edge registration)
03	Black band detection error (scanner main scanning direction magnification)
04	Black band is not detected (scanner leading edge registration)
05	Black band is not detected (scanner center line)
06	Black band is not detected (scanner main scanning direction magnification)
07	Black band is not detected (scanner auxiliary scanning direction magnification)
08	Black band is not detected (DP main scanning direction magnification far end)
09	Black band is not detected (DP main scanning direction magnification near end)
0a	Black band is not detected (DP auxiliary scanning direction magnification leading edge)
0b	Black band is not detected (DP auxiliary scanning direction magnification leading edge original check)
0c	Black band is not detected (DP auxiliary scanning direction trailing edge)
0d	White band is not detected (DP auxiliary scanning direction trailing edge 2)
0e	DMA time out
0f	Auxiliary scanning direction magnification error
10	Auxiliary scanning direction leading edge detection error
11	Auxiliary scanning direction trailing edge detection error
12	Auxiliary scanning direction skew 1.5 error
13	Maintenance request error
14	Main scanning direction center line error
15	Main scanning direction skew 1.5 error
16	Main scanning direction magnification error
17	Service call error
18	DP paper misfeed error

Item No.	Description
U411	

Codes	Description
1a	Original error (Dirt of the original for adjustment and damage)
1b	Original error (scanner input gamma adjustment)
1c	Original error (scanner matrix adjustment)
63	TestRAW acquisition completion

Completion

Press the stop key. The screen for selecting a maintenance item is displayed.

Item No.	Description
U425	**Setting the target** **Description** Enters the lab values that is indicated on the back of the chart (P/N: 7505000005) used for adjustment. **Purpose** Performs data input in order to correct for differences in originals during automatic adjustment. **Method** 1. Press the start key. 2. Select the item to be set.

Display	Description
White	Setting the white patch for the original for adjustment
Black	Setting the black patch for the original for adjustment
Gray1	Setting the Gray1 patch for the original for adjustment
Gray2	Setting the Gray2 patch for the original for adjustment
Gray3	Setting the Gray3 patch for the original for adjustment
C	Setting the cyan patch for the original for adjustment
M	Setting the magenta patch for the original for adjustment
Y	Setting the yellow patch for the original for adjustment
R	Setting the red patch for the original for adjustment
G	Setting the green patch for the original for adjustment
B	Setting the blue patch for the original for adjustment
Adjust Original	Setting the main and auxiliary scanning directions

3. Select the item to be set.

Display	Description	Setting range
L	Setting the L value	0.0 to 100.0
a	Setting the a value	-200.0 to 200.0
b	Setting the b value	-200.0 to 200.0

4. Enters the value that is indicated on the back of the chart using the cursor left/right keys or numeric keys.
5. Press the start key. The value is set.

Item No.	Description
U425	**Setting: [Adjust Original]** 1. Measure the distance from the leading edge to the top of black belt 1 of the original at A, B and C. Measurement procedure 1) Measure the distance from the leading edge to the top of black belt 1 of the original at A (30 mm from the left edge), B (148.5 mm from the left edge) and C (267 mm from the left edge), respectively. 2) Apply the following formula for the values obtained: ((A + B + C) / 3) 2. Enter the values solved using the cursor left/right keys or numeric keys in [Dist1]. 3. Press the start key. The value is set. 4. Measure the distance from the left edge to the right edge black belt 2 of the original at F. Measurement procedure 1) Measure the distance from the left edge to the right edge black belt 2 of the original at F (15 mm from the top edge of black belt 1). 5. Enter the values using the cursor left/right keys or numeric keys in [Dist2]. 6. Press the start key. The value is set. 7. Measure the distance from the top edge of black belt 1 to the bottom of black belt 3 of the original at D and E. 1) Measure the distance from the top edge of black belt 1 to the bottom of black belt 3 of the original at D (30 mm from the left edge) and E (267 mm from the left edge), respectively. 2) Apply the following formula for the values obtained: (D/2 + E/2) 8. Enter the measured value using the cursor left/right keys or numeric keys in [Dist3]. 9. Press the start key. The value is set. 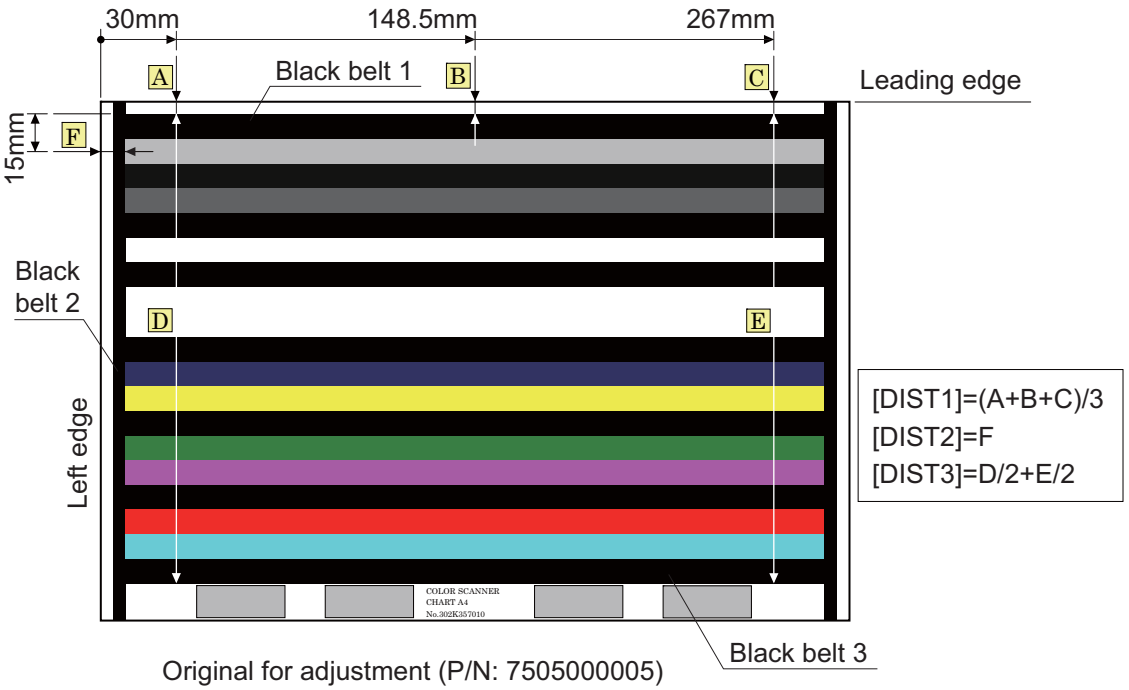 **Figure 1-3-19** **Completion** Press the stop key. The screen for selecting a maintenance item No. is displayed.

Item No.	Description
U432	**Setting the center offset for the exposure** **Description** Sets the offset value for the setting data for exposure centering adjustment under user simulation. For example, if the value for the exposure centering adjustment is set to -1 and you change the offset value to +2, image processing is performed as though the exposure centering adjustment setting is +1. **Purpose** Set according to the preference of the user. **Setting** 1. Press the start key. 2. Select [B/W]. 3. Select image quality mode to be set. 4. Change the setting value using the cursor left/right keys or numeric keys. **Display** / **Description** / **Setting range** / **Initial setting** Text + Photo / Offset value for the text & photo mode / -3 to 3 / 0 Photo / Offset value for the photo mode / -3 to 3 / 0 Text / Offset value for the text mode / -3 to 3 / 0 * : If the setting value is increased to increase the exposure centering adjustment value, images is darker. If the setting value is decreased to decrease the exposure centering adjustment value, images is lighter. 5. Press the start key. The value is set. **Supplement** While this maintenance item is being executed, copying from an original is available in interrupt copying mode (which is activated by pressing the system menu key). **Completion** Press the stop key. The screen for selecting a maintenance item No. is displayed.

Item No.	Description
U470	**Setting the JPEG compression ratio**

Description
Sets the compression ratio for JPEG images in each image quality mode.
Purpose
To change the setting in accordance with the image that the user is copying. For example, in order to soften the coarseness of the image when making copies at over 200% magnification, change the level of compression by raising the value. Lowering the value will increase the compression and thereby lower the image quality; Raising the value will increase image quality but lower the image processing speed.

Method
1. Press the start key.
2. Select the item to be set.

Display	Description
Copy	Compression ratio for copying
Send	Compression ratio for sending
System	Compression ratio for temporary storage in system

Setting: [Copy]
1. Select the item to be set.

Display	Description
Photo	Compression ratio in the photo mode
Text	Compression ratio in the text mode

2. Select the item to be set.
3. Change the setting value using the cursor left/right keys or numeric keys.

Display	Description	Setting range	Initial setting
Y	Compression ratio of brightness	1 to 100	90
CbCr	Compression ratio of color differential	1 to 100	90

4. Press the start key. The value is set.

Setting: [Send]
1. Select the item to be set.

Display	Description
Photo	Compression ratio in the photo mode
Text	Compression ratio in the text mode
HC-PDF	Compression ratio of high compression PDF

Item No.	Description
U470	

2. Select the item to be set.
3. Change the setting value using the cursor left/right keys or numeric keys.
   [Photo] or [Text]

Display	Description	Setting range	Initial setting
Y1 to Y5	Compression ratio of brightness	1 to 100	30/40/51/70/90
CbCr1 to CbCr5	Compression ratio of color differential	1 to 100	30/40/51/70/90

[HC-PDF]

Display	Description	Setting range	Initial setting
Y3 to Y3	Compression ratio of brightness	1 to 100	15/25/60
CbCr3 to CbCr3	Compression ratio of color differential	1 to 100	15/25/60

4. Press the start key. The value is set.

Setting: [System]

1. Select the item to be set.
2. Change the setting value using the cursor left/right keys or numeric keys.

Display	Description	Setting range	Initial setting
Y	Compression ratio of brightness	1 to 100	90
CbCr	Compression ratio of color differential	1 to 100	90

3. Press the start key. The value is set.

Supplement

While this maintenance item is being executed, copying from an original is available in interrupt copying mode (which is activated by pressing the system menu key).

Completion

Press the stop key. The screen for selecting a maintenance item No. is displayed.

Item No.	Description
U901	**Checking copy counts by paper feed locations** **Description** Displays or clears copy counts by paper feed locations. **Purpose** To check the time to replace consumable parts. Also to clear the counts after replacing the consumable parts. **Method** 1. Press the start key. The counts by paper feed locations are displayed. **Display** / **Description** MPT — MP tray Cassette1 — Cassette 1 Cassette2 — Cassette 2 (optional paper feeder) Cassette3 — Cassette 3 (optional paper feeder) Duplex — Duplex unit * : When an optional paper feed device is not installed, the corresponding count is not displayed. **Clearing** 1. Select the counts to be cleared. [Cassette2] and [Cassette3] cannot be cleared. 2. Select the counts for all and press [Clear]. 3. Press the start key. The counter value is cleared. **Completion** Press the stop key. The screen for selecting a maintenance item No. is displayed.

Item No.	Description
U903	**Checking/clearing the paper jam counts** **Description** Displays or clears the jam counts by jam locations. **Purpose** To check the paper jam status. Also to clear the jam counts after replacing consumable parts. **Method** 1. Press the start key. 2. Select the item. **Method: [Cnt]** 1. Select [Cnt]. The count of jam code by type is displayed. Codes for which the count value is 0 are not displayed. 2. Change the screen using the cursor up/down keys. 3. Select the count value for jam code and press [Clear]. The individual counter cannot be cleared. 4. Press the start key. The counter value is cleared. **Method: [Total Cnt]** 1. Select [Total Cnt]. The total number of jam code by type is displayed. 2. Change the screen using the cursor up/down keys. The total number of jam count cannot be cleared. **Completion** Press the stop key. The screen for selecting a maintenance item No. is displayed.

Display	Description
Cnt	Displays/clears the jam counts
Total Cnt	Displays the total jam counts

Item No.	Description
U904	**Checking/clearing the call for service counts** **Description** Displays or clears the service call code counts by types. **Purpose** To check the service call code status by types. Also to clear the service call code counts after replacing consumable parts. **Method** 1. Press the start key. 2. Select the item. **Method: [Cnt]** 1. Select [Cnt]. The count for service call detection by type is displayed. Codes for which the count value is 0 are not displayed. 2. Change the screen using the cursor up/down keys. 3. Select the count value for service call code and press [Clear]. The individual counter cannot be cleared. 4. Press the start key. The counter value is cleared. **Method: [Total Cnt]** 1. Select [Total Cnt]. The total number of service call counts by type is displayed. 2. Change the screen using the cursor up/down keys. The total number of service call count cannot be cleared. **Completion** Press the stop key. The screen for selecting a maintenance item No. is displayed.

Display	Description
Cnt	Displays/clears the call for service counts
Total Cnt	Displays the total call for service counts

<table>
<tr><th>Item No.</th><th>Description</th></tr>
<tr><td>U905</td><td>

Checking counts by optional devices

Description
Displays the counts of document processor or document finisher.
Purpose
To check the use of document processor or document finisher.

Method
1. Press the start key.
2. Select the device to be checked. The count of the selected device is displayed.

Display	Description
DP	Counts of document processor
DF	Counts of document finisher

DP

Display	Description
ADP	Counts of single-sided originals that has passed through the DP
RADP	Counts of double-sided originals that has passed through the DP

DF

Display	Description
Sorter	Counts of copies that has passed through the sorter
Staple	Frequency the stapler has been activated

Completion
Press the stop key. The screen for selecting a maintenance item No. is displayed.

</td></tr>
<tr><td>U910</td><td>

Clearing the print coverage data

Description
Clears the accumulated data for the print coverage per A4 size paper.
Purpose
To clear data as required at times such as during maintenance service.

Method
1. Press the start key.
2. Select [Execute].
3. Press the start key. The print coverage data is cleared.

Completion
Press the stop key. The screen for selecting a maintenance item No. is displayed.

</td></tr>
</table>

Item No.	Description
U917	**Setting backup data reading/writing** **Description** Retrieves the backup data to a USB memory from the machine; or writes the data from the USB memory to the machine. **Purpose** Machine information is backed up and restored. **Method** 1. Press the power key on the operation panel, and after verifying the power indicator has gone off, switch off the main power switch. 2. Insert USB memory in USB memory slot. 3. Turn the main power switch on. Wait for 10 seconds to allow the machine to recognize the USB memory. 4. Enter the maintenance item. 5. Press the start key. 6. Select [Export] or [Import] and press the start key.

Display	Description
Import	Writing data from the USB memory to the machine
Export	Retrieving from the machine to a USB memory

7. Select the item.

Display	Description	Depending data
Address Book	Address book	-
Job Account	Job accounting	-
One Touch	Information on one-touch key	Address book
User	User managements	Job accounting
Program	Program information	Job accountings and user managements
Shortcut	Shortcut information	Job accountings, user managements and document box information
Document Box	Document box information	Job accountings and user managements
Fax Forward	FAX transfer information	Job accountings, user managements and document box information

* : Since data are dependent with each other, data other than those assigned are also retrieved or written in.

8. Select [On] using the cursor left/right keys.
9. Press the start key. Starts reading or writing.
   The progress of selected item is displayed in %.
   When an error occurs, the operation is canceled and an error code is displayed.
10. When normally completed, [Fin] is displayed.
11. Turn the main power switch off and on after completing writing when selecting [Import].

Item No.	Description
U917	**Error Codes**

Codes	Description	Codes	Description
e002	Parameter error	e31e	User managements error
e003	File write error	e31f	User managements open error
e004	File initialization error	e320	User managements error
e005	File error	e321	User managements open error
e006	Processing error	e322	User managements list error
e010	Address book clear error (contact)	e323	User managements list error
e011	Address book open error (contact)	e324	Shortcut open error
e012	Address book list error (contact)	e325	Shortcut list error
e013	Address book list error (contact)	e326	Shortcut list error
e014	Address book clear error (group)	e410	Box file open error
e015	Address book open error (group)	e411	Box error in writing
e016	Address book list error (group)	e412	Box error in reading
e017	Address book list error (group)	e413	Box list error
e110	Job accounting clear error	e414	Box list error
e111	Job accounting open error	e415	Box error
e112	Job accounting open error	e416	Box error
e113	Job accounting error in writing	e417	Box open error
e114	Job accounting list error	e418	Box close error
e115	Job accounting list error	e419	Box creation error
e210	One-touch open error	e41a	Box creation error
e211	One-touch list error	e41b	Box deletion error
e212	One-touch list error	e41c	Box movement error
e310	User managements backup error	e510	Program error in writing
e311	User managements clear error	e511	Program error in reading
e312	User managements open error	e710	Fax memory open error
e313	User managements open error	e711	Fax memory initialization error
e314	User managements open error	e712	Fax memory list error
e315	User managements error in writing	e713	Fax memory error
e316	User managements list error	e714	Fax memory error
e317	User managements list error	e715	Fax memory mode error
e318	User managements list error	e716	Fax memory error
e319	User managements list error	e717	Fax memory error
e31a	User managements open error	e718	Fax memory mode error
e31b	User managements error	e910	File reading error
e31c	User managements error	e911	File writing error
e31d	User managements open error	e912	Data mismatch

Item No.	Description
U917	**Error Codes**

Codes	Description	Codes	Description
e913	Log file open error	d008	File rename error
e914	Log file error in writing	d009	File open error
e915	Directory open error	d00a	File close error
e916	Directory error in reading	d00b	File reading error
e917	Synchronization error	d00c	File writing error
e918	Synchronization error	d00d	File copy error
d000	Unspecified error	d00e	File compressed error
d001	HDD unavailable	d00f	File decompressed error
d002	USB memory is not inserted	d010	Directory open error
d003	File for writing is not found in the USB	d011	Directory creation error
d004	File for reading is not found in the HDD	d012	File writing error
d005	USB error in writing	d013	File reading error
d006	USB error in reading	d014	File deletion error
d007	USB unmount error	d015	File copy error to the USB

Completion
Press the stop key. The screen for selecting a maintenance item No. is displayed.

U927

Clearing the all copy counts and machine life counts (one time only)

Description
Resets all of the counts back to zero.

Supplement
The total account counter and the machine life counter can be cleared only once if all count values are 1000 or less.

Method
1. Press the start key.
2. Select [Execute].
3. Press the start key. All copy counts and machine life counts are cleared.

Completion
Press the stop key. The screen for selecting a maintenance item No. is displayed.

Item No.	Description
U935	**Relay board maintenance** **Description** Sets the mode when call for service (C0060) occurs. **Purpose** Sets the machine status temporarily when call for service (C0060) occurs. However, after the setting, call for service (C0060) occurs again when progress of period. **Setting** 1. Press the start key. 2. Select [Mode]. 3. Change the setting using the cursor left/right keys. Display: Mode0 — Description: Setting mode: OFF Display: Mode1 — Description: Setting mode: ON (Usable up to three times of use) * : Initial setting: Mode0 4. Press the start key. The setting is set. 5. Turn the main power switch off and on. **Supplement** After removing the cause of the problem, be sure to change the setting in OFF.

Item No.	Description
U942	**Setting of deflection for feeding from DP** **Description** Adjusts the deflection generated when the document processor is used. **Purpose** Use this mode if an original non-feed jam, oblique feed or wrinkling of original occurs when the document processor is used. **Setting** 1. Press the start key. 2. Press the system menu key. 3. Place an original on the DP and press the start key to make a test copy. 4. Press the system menu key. 5. Select the item to be adjusted. 6. Change the setting value using the cursor left/right keys or numeric keys.l

Display	Description	Setting range	Initial setting	Change in value per step
Front	Deflection of DP paper feed motor (DPPFM)	-31 to 31	0	0.31 mm
Back	Deflection of DP switchback motor (DPSBM)	-31 to 31	0	0.39 mm

* : The greater the value, the larger the deflection; the smaller the value, the smaller the deflection.
If an original non-feed jam or oblique feed occurs, increase the setting value. If wrinkling of original occurs, decrease the value.

7. Press the start key. The value is set.

Completion
Press the stop key. The screen for selecting a maintenance item No. is displayed.

U985	**Displaying the developer history** **Description** Displays the past record of machine number and the developer counter. **Purpose** To check the count value of machine number and the developer counter. **Method** 1. Press the start key. The each history displayed by five cases.

Display	Description
Machine History 1 - 5	Historical records of the machine number
Cnt History 1 - 5	Historical records of developer counter

Completion
Press the stop key. The screen for selecting a maintenance item No. is displayed.

1-3-2 Service mode

The machine is equipped with a maintenance function which can be used to maintain and service the machine.

(1) Printing the service status page

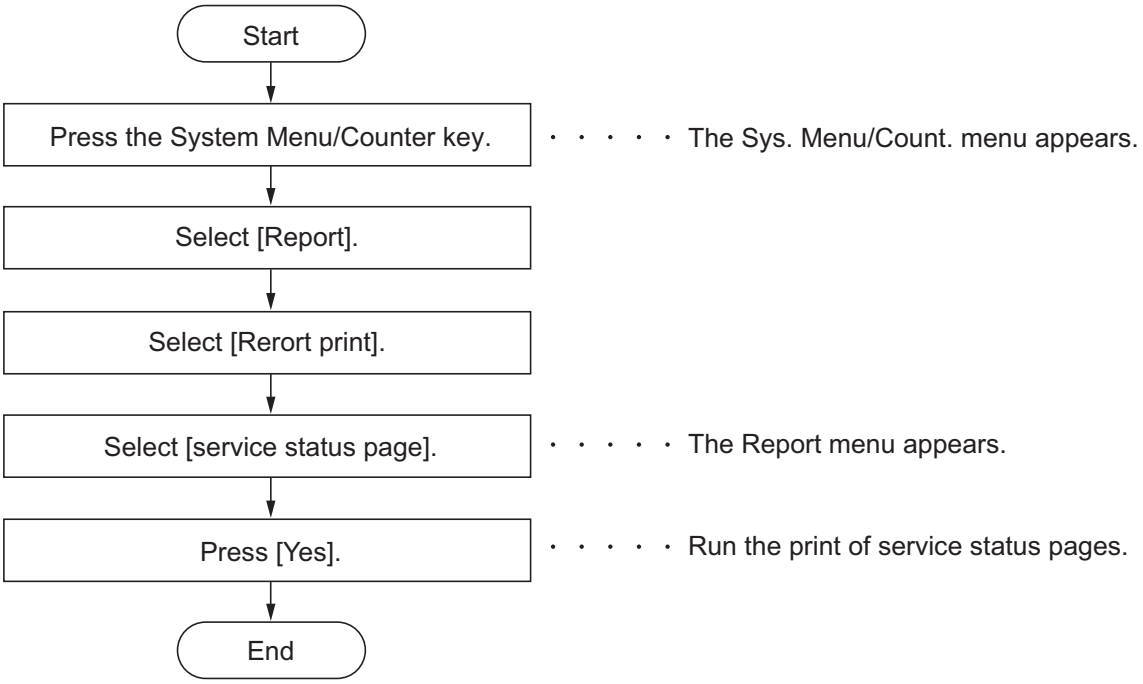

Service items	Description
Service Status	**Printing a status page for service purpose** **Description** Prints a status page for service purpose. The status page includes various settings and service cumulative. **Purpose** To acquire the current printing environmental parameters and cumulative information. **Method** 1. Select [Service status]. 2. Select [YES]. Two pages will be printed. **Completion** Press the System Menu/Counter key.

Service items	Description

Service status page (1)

Service Status Page

MFP

(2) 10/10/2010 12:00

(1) Firmware version 2K3_2000.000.000 2010.10.10 (3) [XXXXXXXX] (4) [XXXXXXXX] (5) [XXXXXXXX]

Controller Information

Memory status

(7) Standard Size 128.0 KB
(8) Option Slot 128.0 KB
(9) Total Size 256.0 KB

Time

(10) Local Time Zone +01:00 Tokio
(11) Date and Time 10/10/2010 12:00
(12) Time Server 10.183.53.13

Installed Options

(13) Paper feeder Cassette
(14) Finisher 500-Finisher
(15) Card Authentication Kit (B) Installed

Print Coverage

(16) Average(%) / Usage Page(A4/Letter Conversion)
(17) Total
K: 1.10 / 1111111.11
(18) Copy
K: 1.10 / 1111111.11
(19) Printer
K: 1.10 / 1111111.11
(20) FAX
K: 1.10 / 1111111.11
(21) Period (27/10/2009 - 03/11/2009 08:40)
(22) Last Page K/C/M/Y(%) 1.00 / 2.22 / 3.33 / 4.44

FAX Information

(23) Rings (Normal) 3
(24) Rings (FAX/TEL) 3
(25) Rings (TAD) 3
(26) Option DIMM Size 16 MB

(27) FRPO Status
User Top Margin A1+A2/100 0.00
User Left Margin A3+A4/100 0.00
PDF mode Y5 00

1

(6) [XXXXXXXXXXXXXXXX]

Figure 1-3-20

Service items	Description
	Service status page (2)

Service Status Page

MFP 10/10/2010 12:00

Firmware version 2K3_2000.000.000 2010.10.10 [XXXXXXXX] [XXXXXXXX] [XXXXXXXX]

Engine Information

(28) NVRAM Version _1F31225_1F31225
(29) Scanner Version 2K3_1200.001.089
(30) FAX
FAX BOOT Version 2K3_5000.001.001
FAX APL Version 2K3_5100.001.001
FAX IPL Version 2K3_5200.001.001
(31) MAC Address 00:C0:EE:D0:01:0D
(32) DP Counters
Total 1234

Send Information

(33) Date and Time 10/10/10
(34) Address

1/2 **(35) (36)**
(37) 100/100
(38) 0/0/0/0/0
(39) 0/0/0/0/0
(40) 0/0/0/0/0/0/0/0/
(41) 0000000/0000000/0000000/0000000/0000000/0000000/
0000000/0000000/0000000/0000000/
F00/U00/0/0/0/30/30/70/70/abcde/1/0 **(42) (43) (44) (45) (46) (47) (48) (49) (50) (51) (52) (53)**
(54) 0000/0000/0000/0000/0000/0000/0000/0000/0000/0000/0000/0000/0000/0000/0000/
0000/0000/0000/0000/0000/0000/0000/0000/0000/0000/
(55) 12345678/11223344/00001234abcd567800001234abcd5678/01234567890123456789012345678901/0008/00/07
2K3_D100.001.005/0/ **(56) (57)**
[ ][ ] **(58)**
[2K3_0000.001.005] **(59)**
(60) 0000000000/F80C001A37/302A183C00/000100013D/8791BEC305/0000
0/3/ **(61) (62)**
(63) ABCDEFGHIJ/

2 [XXXXXXXXXXXXXXXX]

Figure 1-3-21

Service items	Description
	Detail of service status page

No.	Description	Supplement
(1)	Firmware version	-
(2)	System date	-
(3)	Engine soft version	-
(4)	Engine boot version	-
(5)	Operation panel mask version	-
(6)	Machine serial number	-
(7)	Standard memory size	-
(8)	Optional memory size	-
(9)	Total memory size	-
(10)	Local time zone	-
(11)	Report output date	Day/Month/Year hour:minute
(12)	NTP server name	-
(13)	Presence or absence of the optional paper feeder	Paper feeder 1/Paper feeder 2/Not Installed
(14)	Presence or absence of the optional paper finisher	500-Finisher/Not Installed
(15)	Presence or absence of the optional IC card authentication kit	Installed/Not Installed/Trial
(16)	Page of relation to the A4/Letter	-
(17)	Average coverage for total	Black/Cyan/Magenta/Yellow
(18)	Average coverage for copy	Black/Cyan/Magenta/Yellow
(19)	Average coverage for printer	Black/Cyan/Magenta/Yellow
(20)	Average coverage for fax	Black/Cyan/Magenta/Yellow
(21)	Cleared date and output date	-
(22)	Coverage on the final output page	-
(23)	Number of rings	0 to 15
(24)	Number of rings before automatic switching	0 to 15
(25)	Number of rings before connecting to answering machine	0 to 15
(26)	Optional DIMM size	-
(27)	FRPO setting	-

Service items	Description

No.	Description	Supplement
(28)	NV RAM version	_ 1F3 1225 _ 1F3 1225 (a) (b) (c) (d) (e) (f) (a) Consistency of the present software version and the database _ (underscore): OK * (Asterisk): NG (b) Database version (c) The oldest time stamp of database version (d) Consistency of the present software version and the ME firmware version _ (underscore): OK * (Asterisk): NG (e) ME firmware version (f) The oldest time stamp of the ME database version Normal if (a) and (d) are underscored, and (b) and (e) are identical with (c) and (f).
(29)	Scanner firmware version	-
(30)	Fax firmware version	-
(31)	Mac address	-
(32)	Number of original feed from DP	-
(33)	The last sent date and time	-
(34)	Transmission address	-
(35)	Destination information	-
(36)	Area information	-
(37)	Margin settings	Top margin/Left margin
(38)	Top offset for each paper source	MP tray/Paper feeder 1/Paper feeder 2/Duplex/ Page rotation
(39)	Left offset for each paper source	MP tray/Paper feeder 1/Paper feeder 2/Duplex/ Page rotation
(40)	Margin/Page length/Page width settings	Top margin integer part/Top margin decimal part/ Left margin integer part/Left margin decimal part/ Page length integer part/Page length decimal part/ Page width integer part/Page width decimal part
(41)	Life counter (The first line)	Machine life/MP tray/Cassette/Paper feeder 1/ Paper feeder 2 /Duplex
	Life counter (The second line)	Drum unit K/Intermediate transfer unit/ Developing unit K/Maintenance kit

Service items	Description

No.	Description	Supplement
(42)	Panel lock information	0: OFF/1: Partial lock/2: Full lock
(43)	USB information	U00: Not installed/U01: Full speed/U02: Hi speed
(44)	Paper handling information	0: Paper source unit select/1: Paper source unit
(45)	Black and white printing double count mode	0: All single counts 3: Folio, Single count, Less than 330 mm (length)
(46)	Billing counting timing	-
(47)	Temperature (machine inside)	-
(48)	Temperature (machine outside)	-
(49)	Relative temperature (machine outside)	-
(50)	Absolute temperature (machine outside)	-
(51)	Fixed assets number	-
(52)	Job end judgment time-out time	-
(53)	Job end detection mode	-
(54)	Media type attributes 1 to 28 (Not used: 18, 19, 20)	Weight settings 0: Light 1: Normal 1 2: Normal 2 3: Normal 3 4: Heavy 1 5: Heavy 2 6: Heavy 3 7: Extra Heavy Fuser settings 0: High 1: Middle 2: Low 3: Vellum Duplex settings 0: Disable 1: Enable
(55)	RFID information	-
(56)	RFID reader/writer version information	-
(57)	Toner install mode information	0: Off t: On
(58)	Soft version of the optional paper feeder	Paper feeder 1/Paper feeder 2
(59	Version of the optional message	-
(60)	Maintenance information	-

Service items	Description

No.	Description	Supplement
(61)	Altitude	0: Standard 1: High altitude 1 2: High altitude 2
(62	Charger roller correction	1 to 5
(63)	Drum serial number	Black

Code conversion

A	B	C	D	E	F	G	H	I	J
0	1	2	3	4	5	6	7	8	9

(2) Executing a service mode

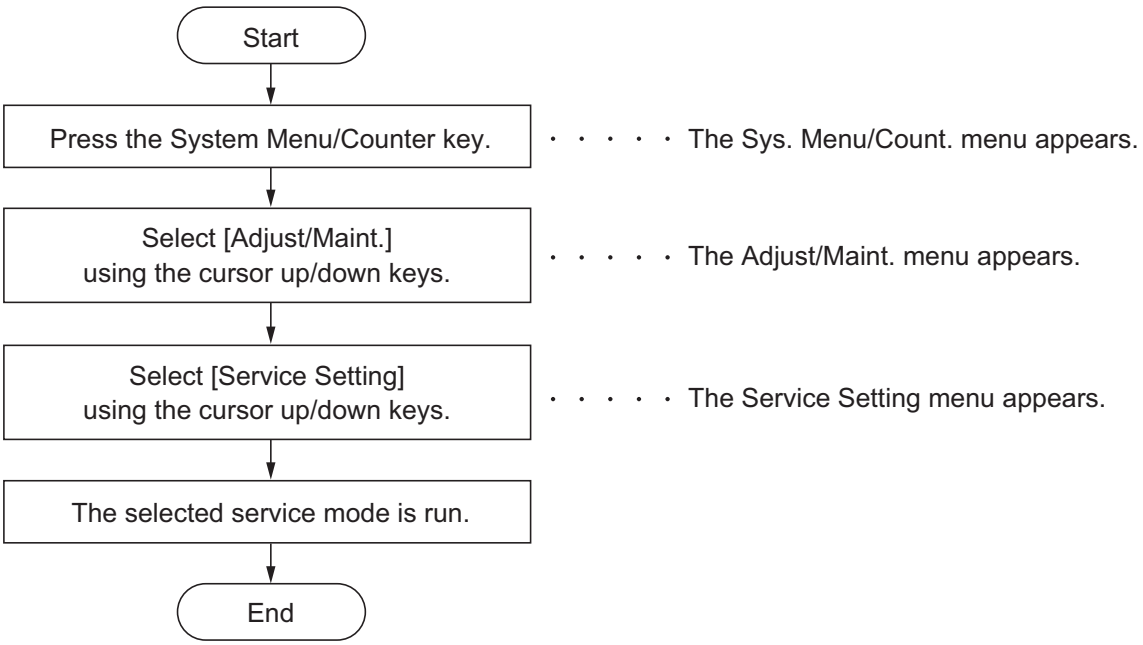

(3) Description of service mode

Service items	Description
Enable Repaired Unit	**Release the disconnection of the cassette and the document feeder.** **Description** Restore the system control when the defective unit is replaced to enable the unit. The menu is displayed only when the unit is detached for failure. **Purpose** Perform when the defective unit is replaced. **Method** 1. Enter the service menu. 2. Select [Enable Repaired Unit]. 3. Press [Start]. **Completion** The unit is automatically powered after execution.

Service items	Description
Maintenance	**Reset the counter of the maintenance kit.** **Description** Reset the kit counter when replacing the maintenance kit. The menu is displayed only when replacing the maintenance kit. **Purpose** Perform when the maintenance kit is replaced. **Method** 1. Enter the service menu. 2. Select [Maintenance]. 3. Press [Start]. **Completion** Automatically completes when the confirmation display is shown.
Center line alighment	**Alighment of the cassette and MP tray and duplex** **Description** Perform settings for the center line adjustment. **Purpose** Perform if the alignment has not been obtained after the center line adjustment. **Method** 1. Enter the service menu. 2. Select [Center Line Adjustment]. 3. Press [Save]. **Completion** Press the Save key in the setting display.
Developer	Perform the toner installation of the developer unit. **Description** Perform the toner installation when the developer unit has been replaced. **Purpose** Perform when the developer unit is replaced. **Method** 1. Enter the service menu. 2. Select [Developer unit]. 3. Press [Start] in the confirmation display. **Completion** The toner installation is performed when power is turned on and off.

Service items	Description
FAX country code	**FAX Country Code** **Description** Initializes software switches and all data in the backup data on the FAX control PWB, according to the destination. **Purpose** To initialize the FAX control PWB. **Method** 1. Enter the Service Setting menu. 2. Select [FAX Country Code] using the cursor up/down keys. 3. Press the start key. 4. Enter a destination code using the numeric keys. 5. Press the start key. The setting is set. 6. Press the start key. Data initialization starts. **Destination code list**

Code	Destination	Code	Destination
000	Japan	253	CTR21 (European nations)
009	Australia		Italy
038	China		Germany
080	Hong Kong		Spain
084	Indonesia		U.K.
088	Israel		Netherlands
097	Korea		Sweden
108	Malaysia		France
126	New Zealand		Austria
136	Peru		Switzerland
137	Philippines		Belgium
152	Middle East		Denmark
156	Singapore		Finland
159	South Africa		Portugal
169	Thailand		Ireland
181	U.S.A.		Norway
242	South America	254	Taiwan
243	Saudi Arabia		

Completion
Press the stop key.

Service items	Description
FAX call Setting	**FAX call setting** **Description** Selects if a fax is to be connected to either a PBX or public switched telephone network. Selects the mode to connect an outside call when connected to a PBX. Access code registration for connection to PSTN. **Purpose** To be executed as required. **Method** 1. Enter the Service Setting menu. 2. Select [FAX Call Set.] using the cursor up/down keys. 3. Press the start key. **Display** / **Description** Exchange Select. — Setting the connection to PBX/PSTN PBX Setting — Setting for a PBX Dial No. to PSTN — Setting access code to PSTN **Setting the connection to PBX/PSTN** 1. Select [Exchange Select.] using the cursor up/down keys. 2. Press the start key. 3. Select [PBX] or [PSTN] using the cursor up/down keys. 4. Press the start key. The setting is set. **Setting for PBX** 1. Select [PBX Setting] using the cursor up/down keys. 2. Press the start key. 3. Select [Loop], [Flash] or [Earth] using the cursor up/down keys. 4. Press the start key. The setting is set. **Setting access code to PSTN** 1. Select [Dial No. to PSTN] using the cursor up/down keys. 2. Press the start key. 3. Enter access code using the numeric keys. (0 to 9, 00 to 99) 4. Press the start key. The setting is set. **Completion** Press the stop key.

1-4-1 Paper misfeed detection

(1) Paper misfeed indication

When a paper misfeed occurs, the machine immediately stops printing and displays the paper misfeed message on the operation panel. To remove paper misfed in the machine, pull out the cassette, open the right cover.

(2) Paper misfeed detection condition

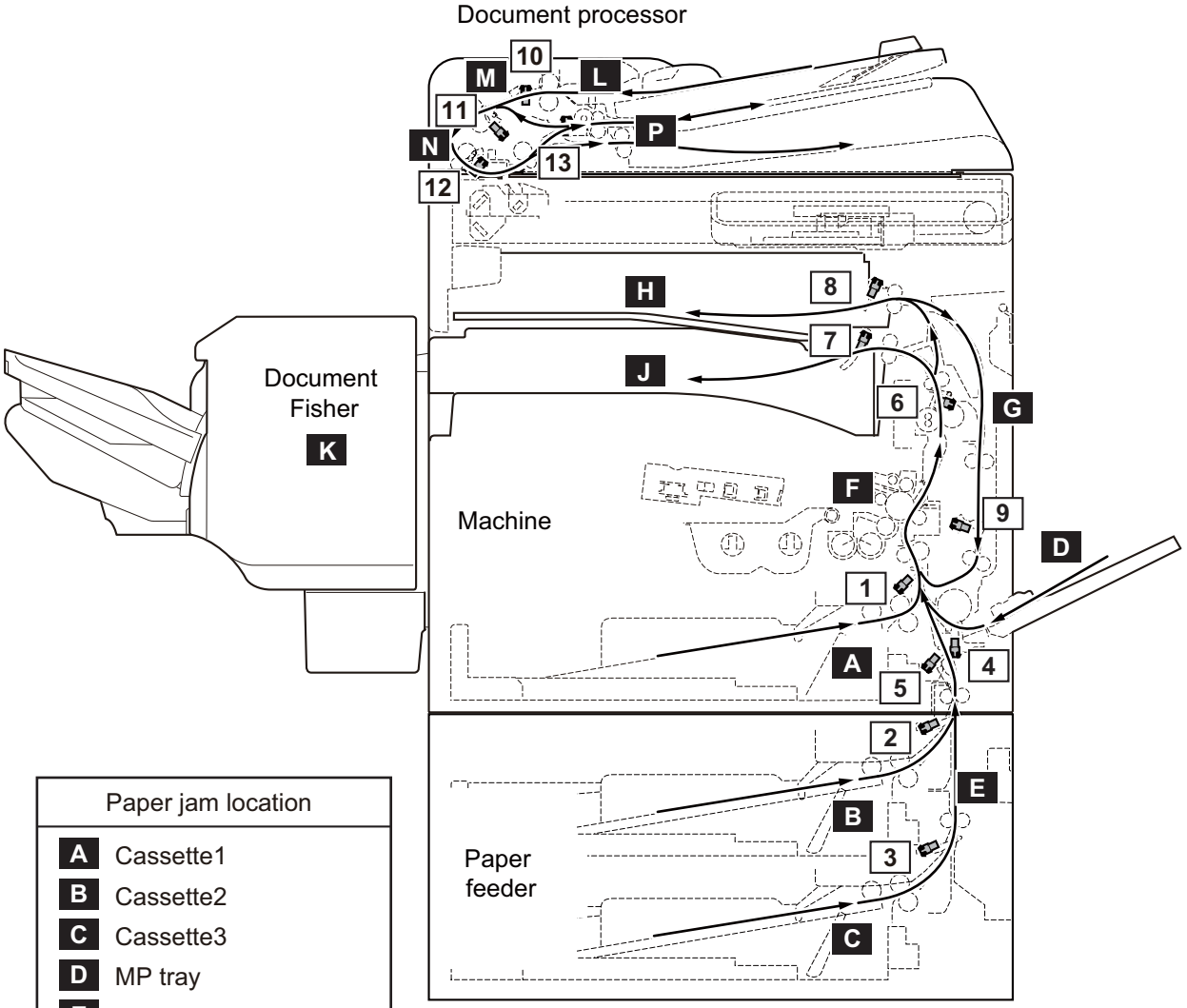

Paper jam location	
A	Cassette1
B	Cassette2
C	Cassette3
D	MP tray
E	Right cover2
F	Machine inside
G	Duplex section
H	Job separatot tray
J	Bridge
K	Document finsher
L	DP original tray
M	DP paper feed section
N	DP feed section
P	DP switchback section

Sensors			
1	Registration sensor	8	Job paper full sensor
2	PF paper feed sensor1	9	Duplex sensor
3	PF paper feed sensor2	10	DP paper feed sensor
4	MP paper feed sensor	11	DP registration sensor
5	Feed sensor	12	DP timing sensor
6	Eject sensor	13	DP switchback sensor
7	Paper full sensor		

Figure 1-4-1 Paper jam location

Code	Contents	Conditions	Jam location*
0000	Initial jam	The power is turned on when a sensor in the conveying system is on.	-
0100	Secondary paper feed request time out	Secondary paper feed request given by the controller is unreachable.	F
0101	Waiting for process package to be ready	Process package won't be ready.	F
0104	Waiting for conveying package to be ready	Conveying package won't be ready.	F
0106	Paper feeding request for duplex printing time out	Paper feeding request for duplex printing given by the controller is unreachable.	F
0107	Waiting for fuser package to be ready	Fuser package won't be ready.	-
0110	Right cover open	The right cover is opened during printing.	-
0111	Front cover open	The front cover is opened during printing.	-
0120	Receiving a duplex paper feeding request while paper is empty	Paper feed request was received from the duplex section despite the absence of paper in the duplex section.	G
0121	Exceeding number of duplex pages circulated	The controller issued the duplex section a request for more pages than the duplex print cycle contains.	G
0210	Right lower cover open	The right lower cover is opened during printing.	-
0501	No paper feed from cassette 1	The registration sensor (RS) does not turn on during paper feed from cassette 1.	A
0502	No paper feed from cassette 2	PF feed sensor 1 (PFFS1) does not turn on during paper feed from cassette 2 (Retry 1 times).	B
0503	No paper feed from cassette 3	PF feed sensor 2 (PFFS2) does not turn on during paper feed from cassette 3 (Retry 1 times).	C
0508	No paper feed from duplex section	The registration sensor (RS) does not turn on during paper feed from duplex section.	G
0509	No paper feed from MP tray	The registration sensor (RS) does not turn on during paper feed from MP tray.	D
0511	Multiple sheets in cassette 1	The registration sensor (RS) does not turn off during paper feed from cassette 1.	A
0512	Multiple sheets in cassette 2	PF feed sensor 1 (PFFS1) does not turn off during paper feed from cassette 2.	B
0513	Multiple sheets in cassette 3	PF feed sensor 2 (PFFS2) does not turn off during paper feed from cassette 3.	C
0518	Multiple sheets in duplex section	The registration sensor (RS) does not turn off during paper feed from duplex section.	G
0519	Multiple sheets in MP tray	The registration sensor (RS) does not turn off during paper feed from MP tray.	D

*: Refer to figure 1-4-1 for paper jam location (see page 1-4-1).

Code	Contents	Conditions	Jam location*
1403	PF feed sensor 1 non arrival jam	PF feed sensor 1 (PFFS1) does not turn on during paper feed from cassette 3.	E
1413	PF feed sensor 1 stay jam	PF feed sensor 1 (PFFS1) does not turn off during paper feed from cassette 3.	E
4002	Registration sensor non arrival jam	The registration sensor (RS) does not turn on during paper feed from cassette 2.	E
4003		The registration sensor (RS) does not turn on during paper feed from cassette 3.	E
4012	Registration sensor stay jam	The registration sensor (RS) does not turn off during paper feed from cassette 2.	E
4013		The registration sensor (RS) does not turn off during paper feed from cassette 3.	E
4201	Eject sensor non arrival jam	The eject sensor (ES) does not turn on during paper feed from cassette 1.	F
4202		The eject sensor (ES) does not turn on during paper feed from cassette 2.	F
4203		The eject sensor (ES) does not turn on during paper feed from cassette 3.	F
4208		The eject sensor (ES) does not turn on during paper feed from duplex section.	F
4209		The eject sensor (ES) does not turn on during paper feed from MP tray.	F
4211	Eject sensor stay jam	The eject sensor (ES) does not turn off during paper feed from cassette 1.	F
4212		The eject sensor (ES) does not turn off during paper feed from cassette 2.	F
4213		The eject sensor (ES) does not turn off during paper feed from cassette 3.	F
4218		The eject sensor (ES) does not turn off during paper feed from duplex section.	F
4219		The eject sensor (ES) does not turn off during paper feed from MP tray.	F
4301	Duplex sensor non arrival jam	The duplex sensor (DUS) does not turn on during paper feed from cassette 1.	F
4302		The duplex sensor (DUS) does not turn on during paper feed from cassette 2.	F
4303		The duplex sensor (DUS) does not turn on during paper feed from cassette 3.	F
4309		The duplex sensor (DUS) does not turn on during paper feed from MP tray.	F

*: Refer to figure 1-4-1 for paper jam location (see page 1-4-1).

Code	Contents	Conditions	Jam location*
4311	Duplex sensor stay jam	The duplex sensor (DUS) does not turn off during paper feed from cassette 1.	G
4312		The duplex sensor (DUS) does not turn off during paper feed from cassette 2.	G
4313		The duplex sensor (DUS) does not turn off during paper feed from cassette 3.	G
4319		The duplex sensor (DUS) does not turn off during paper feed from MP tray.	G
4901	Bridge conveying sensor 1 non arrival jam	The bridge conveying sensor 1 (BRCS1) does not turn on during paper feed from cassette 1.	F
4902		The bridge conveying sensor 1 (BRCS1) does not turn on during paper feed from cassette 2.	F
4903		The bridge conveying sensor 1 (BRCS1) does not turn on during paper feed from cassette 3.	F
4908		The bridge conveying sensor 1 (BRCS1) does not turn on during paper feed from duplex section.	F
4909		The bridge conveying sensor 1 (BRCS1) does not turn on during paper feed from MP tray.	F
4911	Bridge conveying sensor 1 stay jam	The bridge conveying sensor 1 (BRCS1) does not turn off during paper feed from cassette 1.	J
4912		The bridge conveying sensor 1 (BRCS1) does not turn off during paper feed from cassette 2.	J
4913		The bridge conveying sensor 1 (BRCS1) does not turn off during paper feed from cassette 3.	J
4918		The bridge conveying sensor 1 (BRCS1) does not turn off during paper feed from duplex section.	J
4919		The bridge conveying sensor 1 (BRCS1) does not turn off during paper feed from MP tray.	J
5001	Bridge conveying sensor 3 non arrival jam	The bridge conveying sensor 3 (BRCS3) does not turn on during paper feed from cassette 1.	J
5002		The bridge conveying sensor 3 (BRCS3) does not turn on during paper feed from cassette 2.	J
5003		The bridge conveying sensor 3 (BRCS3) does not turn on during paper feed from cassette 3.	J
5008		The bridge conveying sensor 3 (BRCS3) does not turn on during paper feed from duplex section.	J
5009		The bridge conveying sensor 3 (BRCS3) does not turn on during paper feed from MP tray.	J

*: Refer to figure 1-4-1 for paper jam location (see page 1-4-1).

Code	Contents	Conditions	Jam location*
5011	Bridge conveying sensor 3 stay jam	The bridge conveying sensor 3 (BRCS3) does not turn off during paper feed from cassette 1.	J
5012		The bridge conveying sensor 3 (BRCS3) does not turn off during paper feed from cassette 2.	J
5013		The bridge conveying sensor 3 (BRCS3) does not turn off during paper feed from cassette 3.	J
5018		The bridge conveying sensor 3 (BRCS3) does not turn off during paper feed from duplex section.	J
5019		The bridge conveying sensor 3 (BRCS3) does not turn off during paper feed from MP tray.	J
6023	Staple cover open	The staple cover is opened during operation.	K
6043	DF top cover open	The DF top cover is opened during operation.	K
6103	DF paper conveying sensor non arrival jam	The paper conveying sensor (PCS) does not turned on even if a specified time has elapsed after the machine eject signal was received.	J
6113	DF paper conveying sensor stay jam	The paper conveying sensor (PCS) does not turn off within specified time of its turning on.	K
6123	DF paper conveying sensor remaining jam	The paper conveying sensor (PCS) does turned on when the power is turned on or cover close.	K
6413	DF eject paper sensor stay jam	The eject paper sensor (EPS) does not turn off within specified time of its turning on.	K
6423	DF eject paper sensor remaining jam	The eject paper sensor (EPS) does turned on when the power is turned on or cover close.	K
6803	Front adjustment plate operation ON error	The adjustment sensor 1 (ADS1) does turned on when job is executed.	K
6813	Front adjustment plate operation OFF error	The adjustment sensor 1 (ADS1) does turned off when job is executed.	K
6903	Rear adjustment plate operation ON error	The adjustment sensor 2 (ADS2) does turned on when job is executed.	K
6913	Rear adjustment plate operation OFF error	The adjustment sensor 2 (ADS2) does turned off when job is executed.	K
7013	Staple operation error	The next staple hasn't head-poked for the next copy to bind after a predetermined interval while clinching has commenced.	K
7023	Staple initial operation error	Head-poking has not been accomplished after 10 attempts in the initialization at power up or closing the cover.	K
7913	Sequence error 1 (operation prohibited)	Operation commenced in the state the finisher is prohibited to operate.	K
7923	Sequence error 2 (initialoperation error)	A request for maintenance mode has occurred in the state the finisher is prohibited to operate or has commenced operation.	K

*: Refer to figure 1-4-1 for paper jam location (see page 1-4-1).

Code	Contents	Conditions	Jam location*
7933	Sequence error 3 (Error in the reception of backup data)	A backup data command has been received in the state the operation has initiated.	K
7943	Sequence error 4 (standby)	Start of operation has been received in the state of prohibiting to stand by.	K
7953	Sequence error 5 (Error in between copies)	An illegal inter-page or inter-copy interval has occurred.	K
7963	Sequence error 6	The finisher does not deliver the eject-complete command in 15 seconds after the bridge eject sensor is turned off.	K
9000	No original feed	The DP paper feed sensor (DPPFS) does not turn on within specified time during the first sheet feeding (Retry 5 times).	L
9001	DP original conveying jam	DP timing sensor (DPTS) turns off within the specified time since the sensor turns on.	N
9004	DP original switchback jam	During duplex switchback scanning, the DP registration sensor (DPRS) does not turn on within specified time of the DP timing sensor (DPTS) turning off.	P
9010	DP open	The DP is opened during original feeding. Sensor in the conveying system is on when the power is turned on or cover close.	-
9011	DP top cover open	The DP top cover is opened during original feeding.	-
9110	DP paper feed sensor stay jam	The DP paper feed sensor (DPPFS) or DP registration sensor (DPRS) does not turn off within specified time of the DP timing sensor (DPTS) turning on.	N
9200	DP registration sensor non arrival jam	The DP registration sensor (DPRS) does not turn on within specified time of the DP paper feed sensor (DPPFS) turning on.	M
9400	DP timing sensor non arrival jam	The DP timing sensor (DPTS) does not turn on within specified time of the DP registration sensor (DPRS) turning on (Retry 5 times).	M
9410	DP timing sensor stay jam	The DP timing sensor (DPTS) does not turned off within specified time its turning on.	N

*: Refer to figure 1-4-1 for paper jam location (see page 1-4-1).

1-4-2 Self-diagnostic function

(1) Self-diagnostic function

This machine is equipped with self-diagnostic function. When a problem is detected, the machine stops printing and display an error message on the operation panel. An error message consists of a message prompting a contact to service personnel and a four-digit error code indicating the type of the error.

(2) Self diagnostic codes

If the part causing the problem was not supplied, use the unit including the part for replacement.

Code	Contents	Causes	Check procedures/ corrective measures
0030	**FAX control PWB system error** Processing with the fax software was disabled due to a hardware problem.	Defective FAX control PWB.	Replace the fax control PWB and check for correct operation. .
0060	**Engine PWB type error**	Defective engine sub PCB.	Replace the engine PWB and check for correct operation (see page 1-5-34).
0070	**FAX control PWB incompatible detection error** Abnormal detection of FAX control PWB incompatibility In the initial communication with the FAX control PWB, any normal communication command is not transmitted.	Defective FAX software.	Install the fax software.
		Defective FAX control PWB.	Replace the fax control PWB and check for correct operation..
0100	**Backup memory device error**	Defective flash memory.	Replace the main PWB and check for correct operation (see page 1-5-33).
		Defective main PWB.	
0120	**MAC address data error** For data in which the MAC address is invalid.	Defective flash memory.	Replace the main PWB and check for correct operation (see page 1-5-33).
		Defective engine PWB.	Replace the engine PWB and check for correct operation (see page 1-5-34).
0130	**Backup memory read/write error (main PWB)**	Defective flash memory.	Replace the main PWB and check for correct operation (see page 1-5-33).
		Defective main PWB.	
0140	**Backup memory data error (main PWB)**	Defective flash memory.	Replace the main PWB and check for correct operation (see page 1-5-33).
		Defective main PWB.	

Code	Contents	Causes	Check procedures/ corrective measures
0150	**Backup memory read/write error (engine PWB)** Detecting engine PWB EEPROM communication error.	Improper installation engine PWB EEPROM.	Check the installation of the EEPROM and remedy if necessary.
		Defective engine PWB.	Replace the engine PWB and check for correct operation (see page 1-5-34).
		Device damage of EEPROM.	Contact the Service Administrative Division.
0160	**Backup memory data error (engine PWB)**	Defective flash memory.	Replace the engine PWB and check for correct operation (see page 1-5-34).
		Defective engine PWB.	
0170	**Billing counting error** A checksum error is detected in the main and engine backup memories for the billing counters.	Data damage of EEPROM.	Contact the Service Administrative Division.
		Defective PWB.	Replace the main PWB or the engine PWB and check for correct operation (see page 1-5-33, 1-5-34).
0180	**Machine number mismatch** Machine number of main and engine does not match.	Data damage of EEPROM.	Contact the Service Administrative Division.
0320	**I/O CPU communication error** A communication error is detected 10 times in succession.	Defective PWB.	Replace the main PWB or the engine PWB and check for correct operation.(see page 1-5-33,1-5-34)
0800	**Image processing error** JAM05 is detected twice.	Defective main PWB.	Replace the main PWB and check for correct operation(see page 1-5-33).
0830	**FAX control PWB flash program area checksum error** A checksum error occurred with the program of the FAX control PWB.	Defective FAX software.	Install the fax software.
		Defective FAX control PWB.	Replace the FAX control PWB.
0840	**Faults of RTC** The time is judged to go back based on the comparison of the RTC time and the current time or five years or more have passed.	The battery is disconnected from the main PWB.	Check visually and remedy if necessary
		Defective main PWB.	Replace the main PWB and check for correct operation (see page 1-5-33).

Code	Contents	Causes	Check procedures/ corrective measures
0870	**FAX control PWB to main PWB high capacity data transfer error** High-capacity data transfer between the FAX control PWB and the main PWB of the machine was not normally performed even if the data transfer was retried the specified times.	Improper installation FAX control PWB.	Reinstall the FAX control PWB.
		Defective FAX control PWB or main PWB.	Replace the FAX control PWB or main PWB and check for correct operation (see page 1-5-33).
0920	**Fax file system error** The backup data is not retained for file system abnormality of flash memory of the FAX control PWB.	Defective FAX control PWB.	Replace the FAX control PWB and check for correct operation.
1010	**Lift motor error** After cassette 1 is inserted, lift sensor does not turn on within 12 s. This error is detected four times successively.	Defective bottom plate elevation mechanism in the cassette.	Check to see if the bottom plate can move smoothly and repair it if any problem is found.
		Defective connector cable or poor contact in the connector.	Reinsert the connector. Also check for continuity within the connector cable. If none, replace the cable. Lift motor and engine PWB (YC1)
		Defective drive transmission system of the lift motor.	Check if the gears rotate smoothly. If not, grease the bushes and gears. Check for broken gears and replace if any.
		Defective lift motor.	Replace the lift motor.
		Defective engine PWB.	Replace the engine PWB and check for correct operation (see page 1-5-34).

Code	Contents	Causes	Check procedures/ corrective measures
1020	**PF lift motor error (paper feeder)** After cassette 2 is inserted, PF lift sensor 1 does not turn on within 12 s. This error is detected four times successively.	Defective bottom plate elevation mechanism in the cassette.	Check to see if the bottom plate can move smoothly and repair it if any problem is found.
		Defective connector cable or poor contact in the connector.	Reinsert the connector. Also check for continuity within the connector cable. If none, replace the cable. PF lift motor 1 and PF main PWB (YC4)
		Defective drive transmission system of the PF lift motor 1.	Check if the gears rotate smoothly. If not, grease the bushes and gears. Check for broken gears and replace if any.
		Defective PF lift motor 1.	Replace the PF lift motor 1.
		Defective PF main PWB.	Replace the PF main PWB (Refer to the service manual for the paper feeder).
1030	**PF lift motor error (paper feeder)** After cassette 3 is inserted, PF lift sensor 2 does not turn on within 12 s. This error is detected four times successively.	Defective bottom plate elevation mechanism in the cassette.	Check to see if the bottom plate can move smoothly and repair it if any problem is found.
		Defective connector cable or poor contact in the connector.	Reinsert the connector. Also check for continuity within the connector cable. If none, replace the cable. PF lift motor 2 and PF main PWB (YC7)
		Defective drive transmission system of the PF lift motor 2.	Check if the gears rotate smoothly. If not, grease the bushes and gears. Check for broken gears and replace if any.
		Defective PF lift motor 2.	Replace the PF lift motor 2.
		Defective PF main PWB.	Replace the PF main PWB (Refer to the service manual for the paper feeder).
1800	**Paper feeder communication error** A communication error is detected 10 times in succession.	Improper installation paper feeder.	Follow installation instruction carefully again.
		Defective connector cable or poor contact in the connector.	Reinsert the connector. Also check for continuity within the connector cable. If none, replace the cable. PF main PWB (YC3) and engine PWB (YC20)
		Defective engine PWB.	Replace the engine PWB and check for correct operation (see page 1-5-34).
		Defective PF main PWB.	Replace the PF main PWB (Refer to the service manual for the paper feeder).

Code	Contents	Causes	Check procedures/ corrective measures
1900	**Paper feeder EEPROM error** When writing the data, the write data and the read data is not continuously in agreement 5 times.	Defective PF main PWB.	Replace the PF main PWB (Refer to the service manual for the paper feeder).
		Device damage of EEPROM.	Contact the Service Administrative Division.
2000	**Main motor steady-state error** Stable OFF is detected for 1 s continuously after main motor stabilized.	Defective connector cable or poor contact in the connector.	Reinsert the connector. Also check for continuity within the connector cable. If none, replace the cable. Main motor and engine PWB (YC16)
		Defective drive transmission system of the main motor.	Check if the rollers and gears rotate smoothly. If not, grease the bushes and gears. Check for broken gears and replace if any.
		Defective main motor.	Replace the main motor.
		Defective engine PWB.	Replace the engine PWB and check for correct operation (see page 1-5-34).
2010	**Main motor drive error** The main motor is not stabilized within 2 s after driving starts.	Defective connector cable or poor contact in the connector.	Reinsert the connector. Also check for continuity within the connector cable. If none, replace the cable. Main motor and engine PWB (YC16)
		Defective drive transmission system of the main motor.	Check if the rollers and gears rotate smoothly. If not, grease the bushes and gears. Check for broken gears and replace if any.
		Defective main motor.	Replace the main motor.
		Defective engine PWB.	Replace the engine PWB and check for correct operation (see page 1-5-34).
2600	**PF drive motor error (paper feeder)** When the PF drive motor is driven, error signal is detected continuously for 1 s.	Defective connector cable or poor contact in the connector.	Reinsert the connector. Also check for continuity within the connector cable. If none, replace the cable. PF drive motor and PF main PWB (YC2)
		Defective drive transmission system of the PF drive motor.	Check if the rollers and gears rotate smoothly. If not, grease the bushes and gears. Check for broken gears and replace if any.
		Defective PF drive motor.	Replace the PF drive motor.
		Defective PF main PWB.	Replace the PF main PWB (Refer to the service manual for the paper feeder).

Code	Contents	Causes	Check procedures/ corrective measures
3100	**ISU home position error** The home position is not correct when the power is turned on or at the start of copying using the table.	Defective connector cable or poor contact in the connector.	Reinsert the connector. Also check for continuity within the connector cable. If none, replace the cable. Home position sensor and engine PWB (YC13)
		Defective home position sensor.	Replace the home position sensor.
		Defective ISU motor.	Replace the ISU motor.
		Defective CCD PWB.	Replace the image scanner unit (see page 1-5-24).
		Defective engine PWB.	Replace the engine PWB and check for correct operation (see page 1-5-34).
3200	**Exposure lamp error** When input value at the time of exposure lamp illumination does not exceed the threshold value between 5 s.	Defective connector cable or poor contact in the connector.	Reinsert the connector. Also check for continuity within the connector cable. If none, replace the cable. LED PWB and main PWB (YC112) CCD PWB and main PWB (YC113)
		Defective exposure lamp.	Replace the image scanner unit (see page 1-5-24).
		Defective CCD PWB.	
		Defective main PWB.	Replace the main PWB and check for correct operation (see page 1-5-33).
3500	**Communication error between scanner and ASIC** An error code is detected 3 times in succession.	Defective connector cable or poor contact in the connector.	Reinsert the connector. Also check for continuity within the connector cable. If none, replace the cable. CCD PWB and main PWB (YC113)
		Defective CCD PWB.	Replace the image scanner unit (see page 1-5-24).
		Defective main PWB.	Replace the main PWB and check for correct operation (see page 1-5-33).
3600	**Scanner sequence error**	Defective main PWB or engine PWB.	Replace the main PWB or the engine PWB and check for correct operation (see page 1-5-33 or 1-5-34).
4000	**Polygon motor synchronization error** The polygon motor is not stabilized within 10 s after driving starts.	Defective connector cable or poor contact in the connector.	Reinsert the connector. Also check for continuity within the connector cable. If none, replace the cable. Laser scanner unit and engine PWB (YC11)
		Defective polygon motor.	Replace the laser scanner unit (see page 1-5-23).
		Defective engine PWB.	Replace the engine PWB and check for correct operation (see page 1-5-34).

Code	Contents	Causes	Check procedures/ corrective measures
4010	**Polygon motor steady-state error** Stable OFF is detected for 1 s continuously after polygon motor stabilized.	Defective connector cable or poor contact in the connector.	Reinsert the connector. Also check for continuity within the connector cable. If none, replace the cable. Laser scanner unit and engine PWB (YC11)
		Defective polygon motor.	Replace the laser scanner unit (see page 1-5-23).
		Defective engine PWB.	Replace the engine PWB and check for correct operation (see page 1-5-34).
4100	**BD initialization error** BD is not detected within 1 s after polygon motor stabilized.	Defective connector cable or poor contact in the connector.	Reinsert the connector. Also check for continuity within the connector cable. If none, replace the cable. BD PWB and APC PWB (YC1) APC PWB (YC2) and main PWB (YC103)
		Defective APC PWB.	Replace the laser scanner unit (see page 1-5-23).
		Defective BD PWB.	
		Defective main PWB.	Replace the main PWB and check for correct operation (see page 1-5-33).
4700	**VIDEO ASIC device error**	Defective connector cable or poor contact in the connector.	Reinsert the connector. Also check for continuity within the connector cable. If none, replace the cable. Main PWB (YC105) and engine PWB (YC17)
		Defective main PWB or engine PWB.	Replace the main PWB or the engine PWB and check for correct operation (see page 1-5-33, 1-5-34).
6000	**Broken fuser heater wire** The detected temperature of fuser thermistor does not reach the specified temperature (ready indication temperature) after the fuser heater has been turned on continuously for 60 s in warming up. The fusing temperature at 7 seconds and 20 seconds since fuser temperature control has occurred differs by 43°C/109.4°F or less.	Defective connector cable or poor contact in the connector.	Reinsert the connector. Also check for continuity within the connector cable. If none, replace the cable. Fuser heater and power source PWB (YC102) Fuser unit and engine PWB (YC7)
		Deformed connector pin.	See page 1-4-15.
		Defective triac.	See page 1-4-15.
		Fuser thermostat triggered.	Reinsert the fuser unit (see page 1-5-21).
		Broken fuser heater wire.	
		Defective engine PWB.	Replace the engine PWB and check for correct operation (see page 1-5-34).

Code	Contents	Causes	Check procedures/ corrective measures
6020	**Abnormally high fuser thermistor temperature** The fuser thermistor detects a temperature higher than 230°C/446°F continuously for 40 ms. High fuser temperature signal detects a temperature of 255°C/491°F continuously for 40 ms.	Deformed connector pin.	See page 1-4-15.
		Defective triac.	See page 1-4-15.
		Shorted fuser thermistor.	Replace the fuser unit (see page 1-5-21).
		Defective engine PWB.	Replace the engine PWB and check for correct operation (see page 1-5-34).
6030	**Broken fuser thermistor wire** A/D value of the fuser thermistor exceeds 251 bit continuously for 7 s during warming up.	Defective connector cable or poor contact in the connector.	Reinsert the connector. Also check for continuity within the connector cable. If none, replace the cable. Fuser heater and power source PWB (YC102) Fuser unit and engine PWB (YC7)
		Deformed connector pin.	See page 1-4-15.
		Defective triac.	See page 1-4-15.
		Defective fuser thermistor.	Replace the fuser unit (see page 1-5-21).
		Defective engine PWB.	Replace the engine PWB and check for correct operation (see page 1-5-34).
6050	**Abnormally low fuser thermistor temperature** As the stable temperature has reached the second time, the decrease in the fuser thermistor temperature of 60°C/140°F or greater is detected for one second.	Deformed connector pin.	See page 1-4-15.
		Defective triac.	See page 1-4-15.
		Defective fuser thermistor.	Replace the fuser unit (see page 1-5-21).
		Defective fuser heater.	
		Defective engine PWB.	Replace the engine PWB and check for correct operation (see page 1-5-34).

Code	Contents	Causes	Check procedures/ corrective measures
6000/ 6020/ 6030/ 6050 Combined	**Broken fuser heater wire** **Abnormally high fuser thermistor temperature** **Broken fuser thermistor wire** **Abnormally low fuser thermistor temperature**	Deformed connector pin.	If the I/F connector pins of the fuser unit and the main unit are deformed owing to foreign matters, such as paper dusts, replace the connectors or the units including the connectors.
		Defective triac.	Remove the power cord and check that the resistance between terminals T1 and T2 of the triac TRA51 is of several Mega-Ohms and not shorted (see figure 1-4-2). If failed, replace the power source PWB (see page 1-5-34).
		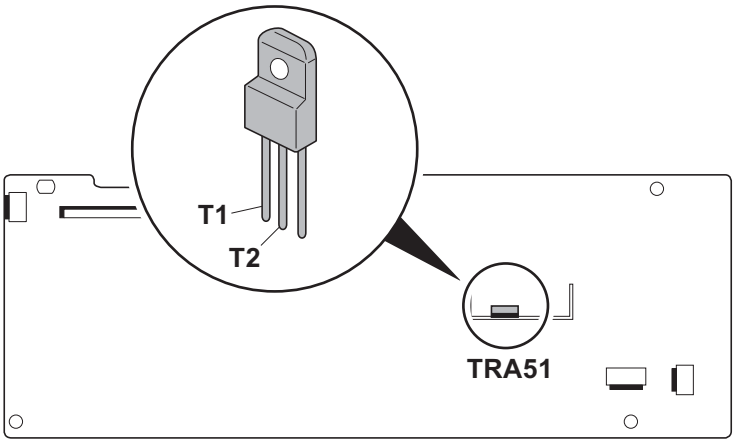 Power source PWB **Figure 1-4-2**	
6400	**Zero-cross signal error** While fuser heater control is performed, the zero-cross signal is not input within 3 s.	Defective connector cable or poor contact in the connector.	Reinsert the connector. Also check for continuity within the connector cable. If none, replace the cable. Power source PWB (YC4) and engine PWB (YC21)
		Defective power source PWB or engine PWB.	Replace the power source PWB or the engine PWB and check for correct operation (see page 1-5-34).
7800	**Broken external thermistor wire** The thermistor output value is 0.3 V or less.	Defective connector cable or poor contact in the connector.	Reinsert the connector. Also check for continuity within the connector cable. If none, replace the cable. Temperature sensor and engine PWB (YC21)
		Defective temperature sensor.	Replace the temperature sensor.

Code	Contents	Causes	Check procedures/ corrective measures
7810	**Short-circuited external thermistor wire** The thermistor output value is 3 V or more.	Defective connector cable or poor contact in the connector.	Reinsert the connector. Also check for continuity within the connector cable. If none, replace the cable. Temperature sensor and engine PWB (YC21)
		Defective temperature sensor.	Replace the temperature sensor.
7900	**Drum unit EEPROM error** No response is issued from the device in reading/writing for 5 ms or more and this problem is repeated five times successively. Mismatch of reading data from two locations occurs eight times successively. Mismatch between writing data and reading data occurs eight times successively.	Defective connector cable or poor contact in the connector.	Reinsert the connector. Also check for continuity within the connector cable. If none, replace the cable. Drum unit and engine PWB (YC15)
		Defective drum unit.	Replace the drum unit (see 1-5-19).
7910	**Developer unit EEPROM error** No response is issued from the device in reading/writing for 5 ms or more and this problem is repeated five times successively. Mismatch of reading data from two locations occurs eight times successively. Mismatch between writing data and reading data occurs eight times successively.	Defective connector cable or poor contact in the connector.	Reinsert the connector. Also check for continuity within the connector cable. If none, replace the cable. Developer unit and engine PWB (YC12
		Defective developer unit.	Replace the developer unit (see 1-5-16).
8030	**Tray upper limit detection problem (document finisher)** When the tray elevation motor raises a tray, the ON status of the tray upper limit sensor is detected.	Defective connector cable or poor contact in the connector.	Reinsert the connector. Also check for continuity within the connector cable. If none, replace the cable. Tray upper limit sensor and DF main PWB (CN5) Paper surface sensor 1/2 and DF main PWB (CN6)
		Defective tray upper limit sensor, paper surface sensor 1/2.	Replace the sensor.
		Defective DF main PWB.	Replace the DF main PWB and check for correct operation.

Code	Contents	Causes	Check procedures/ corrective measures
8040	**Belt problem (document finisher)** The belt sensor does not turn on/off within specified time of the belt solenoid turning on.	Defective connector cable or poor contact in the connector.	Reinsert the connector. Also check for continuity within the connector cable. If none, replace the cable. Belt sensor and DF main PWB (CN10) Belt solenoid and DF main PWB (CN21)
		Defective belt sensor.	Replace the belt sensor.
		Defective belt solenoid.	Replace the belt solenoid.
		Defective DF main PWB.	Replace the DF main PWB and check for correct operation.
8140	**Tray elevation motor problem (document finisher)** The tray low limit sensor or paper surface sensor 1/2 cannot be detected to be on within 10 s since the tray elevation motor is activated.	Defective connector cable or poor contact in the connector.	Reinsert the connector. Also check for continuity within the connector cable. If none, replace the cable. Tray elevation motor and DF main PWB (CN12)
		Defective connector cable or poor contact in the connector.	Reinsert the connector. Also check for continuity within the connector cable. If none, replace the cable. Tray lower limit sensor, and DF main PWB (CN5) Paper surface sensor 1/2 and DF main PWB (CN6)
		The tray elevation motor malfunctions.	Replace the tray elevation motor.
		Defective tray lower limit sensor, paper surface sensor 1/2.	Replace the sensor.
		Defective DF main PWB.	Replace the DF main PWB and check for correct operation.
8210	**Stapler problem (document finisher)** Jam 7012 or 7023 is indicated.	Defective connector cable of staple or poor contact in the connector.	Reinsert the connector. Also check for continuity within the connector cable. If none, replace the cable.
		The stapler is blocked with a staple.	Remove the stapler cartridge, and check the cartridge and the stapling section of the stapler.
		The stapler is broken.	Replace the stapler and check for correct operation.
		Defective DF main PWB.	Replace the DF main PWB and check for correct operation.

Code	Contents	Causes	Check procedures/ corrective measures
8320	**Adjustment motor 2 problem (document finisher)** The adjustment sensor 2 does not turn on/off within specified time of the adjustment motor 2 turning on.	Defective connector cable or poor contact in the connector.	Reinsert the connector. Also check for continuity within the connector cable. If none, replace the cable. Adjustment motor 2 and DF main PWB (CN18) Adjustment sensor 2 and DF main PWB (CN7)
		Defective adjustment sensor 2.	Replace the adjustment sensor 2.
		Defective adjustment motor 2.	Replace the adjustment motor 2.
		Defective DF main PWB.	Replace the DF main PWB and check for correct operation.
8330	**Adjustment motor 1 problem (document finisher)** The adjustment sensor 1 does not turn on/off within specified time of the adjustment motor 1 turning on.	Defective connector cable or poor contact in the connector.	Reinsert the connector. Also check for continuity within the connector cable. If none, replace the cable. Adjustment motor 1 and DF main PWB (CN18) Adjustment sensor 1 and DF main PWB (CN7)
		Defective adjustment sensor 1.	Replace the adjustment sensor 1.
		Defective adjustment motor 1.	Replace the adjustment motor 1.
		Defective DF main PWB.	Replace the DF main PWB and check for correct operation.
8350	**Roller motor problem (document finisher)** The roller sensor does not turn on/off within specified time of the roller motor turning on.	Defective connector cable or poor contact in the connector.	Reinsert the connector. Also check for continuity within the connector cable. If none, replace the cable. Roller motor and DF main PWB (CN20) Roller sensor and DF main PWB (CN11)
		Defective roller sensor.	Replace the roller sensor.
		Defective roller motor.	Replace the roller motor.
		Defective DF main PWB.	Replace the DF main PWB and check for correct operation.

Code	Contents	Causes	Check procedures/ corrective measures
8360	**Slide motor problem (document finisher)** The slide sensor does not turn on/off within specified time of the slide motor turning on.	Defective connector cable or poor contact in the connector.	Reinsert the connector. Also check for continuity within the connector cable. If none, replace the cable. Slide motor and DF main PWB (CN14) Slide sensor and DF main PWB (CN22)
		Defective slide sensor.	Replace the slide sensor.
		Defective slide motor.	Replace the slide motor.
		Defective DF main PWB.	Replace the DF main PWB and check for correct operation.
8460	**EEPROM problem (document finisher)** Reading from or writing to EEPROM cannot be performed.	Defective EEPROM or DF main PWB.	Replace the DF main PWB and check for correct operation.
8800	**Document finisher communication error** A communication error is detected 10 times in succession.	Defective connector cable or poor contact in the connector.	Reinsert the connector. Also check for continuity within the connector cable. If none, replace the cable. Engine PWB (YC19) and DF relay PWB (YC2) DF relay PWB (YC3) and DF main PWB (CN1)
		Defective DF main PWB.	Replace the DF main PWB and check for correct operation.
		Defective engine PWB.	Replace the engine PWB and check for correct operation (see page 1-5-34).
8830	**Bridge communication error (document finisher)** A communication error is detected 10 times in succession.	Defective connector cable or poor contact in the connector.	Reinsert the connector. Also check for continuity within the connector cable. If none, replace the cable. Engine PWB (YC19) and DF relay PWB (YC2) DF relay PWB (YC4) and bridge PWB (YC5)
		Defective bridge PWB.	Replace the bridge PWB and check for correct operation.
		Defective engine PWB.	Replace the engine PWB and check for correct operation (see page 1-5-34).

Code	Contents	Causes	Check procedures/ corrective measures
8990	**Document finisher communication error**	Defective connector cable or poor contact in the connector.	Reinsert the connector. Also check for continuity within the connector cable. If none, replace the cable.
		Defective DF main PWB.	Replace the DF main PWB and check for correct operation.
		Defective bridge PWB.	Replace the bridge PWB and check for correct operation.
9000	**Document processor communication error** A communication error is detected 10 times in succession.	Defective connector cable or poor contact in the connector.	Reinsert the connector. Also check for continuity within the connector cable. If none, replace the cable. DP main PWB and engine PWB (YC18)
		Defective DP main PWB.	Replace the DP main PWB and check for correct operation (see page 1-5-31).
9060	**DP EEPROM error** Read and write data does not match. Data in the specified area of the backup memory does not match the specified values.	Defective DP main PWB.	Replace the DP main PWB and check for correct operation (see page 1-5-31).
		Device damage of EEPROM.	Contact the Service Administrative Division.
9500	**BRU communication error**	IPU PWB error	Contact the Service Administrative Division.
9510	**BRU PWB error**		
9520	**BRU PWB data error**		
9530	**Machine No.backup error C**		Contact the Service Administrative Division.
9540	**Machine No.backup error D**		
9550	**Machine No.backup error E**		
F000	**Main PWB - operation panel PWB communication error**	Defective main PWB.	Turn the main power switch off/on to restart the machine. If the error is not resolved, replace main PWB (see page 1-5-33).
		Defective operation panel PWB.	Replace the operation panel PWB and check for correct operation.
F010	**Main PWB checksum error**	Defective main PWB.	Turn the main power switch off/on to restart the machine. If the error is not resolved, replace main PWB (see page 1-5-33).
F011			
F012			
F013			
F040	**Main PWB - print engine communication error**	Defective main PWB.	Turn the main power switch off/on to restart the machine. If the error is not resolved, replace main PWB (see page 1-5-33).
		Defective engine PWB.	Replace the engine PWB and check for correct operation (see page 1-5-34).
F050	**Print engine ROM checksum error**	Defective engine PWB.	Turn the main power switch off/on to restart the machine. If the error is not resolved, replace engine PWB (see page 1-5-34).

1-4-3 Image formation problems

If the part causing the problem was not supplied, use the unit including the part for replacement.

(1) No image appears (entirely white).

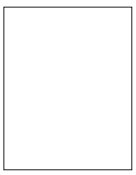

See page 1-4-22

(2) No image appears (entirely black).

See page 1-4-22

(3) Image is too light.

See page 1-4-23

(4) The background is colored.

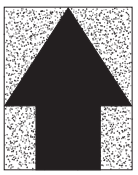

See page 1-4-23

(5) White streaks are printed vertically.

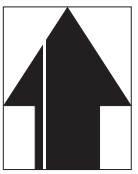

See page 1-4-23

(6) Black streaks are printed vertically.

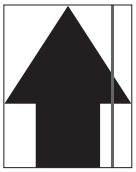

See page 1-4-24

(7) Streaks are printed horizontally.

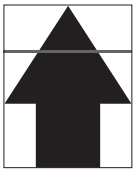

See page 1-4-24

(8) One side of the print image is darker than the other.

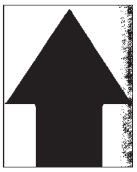

See page 1-4-24

(9) Spots are printed.

See page 1-4-25

(10) Image is blurred.

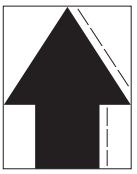

See page 1-4-25

(11) The leading edge of the image is consistently misaligned with the original.

See page 1-4-25

(12) The leading edge of the image is sporadically misaligned with the original.

See page 1-4-25

(13) Paper is wrinkled.

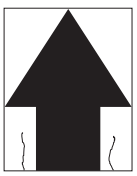

See page 1-4-26

(14) Offset occurs.

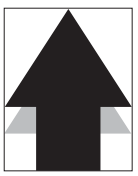

See page 1-4-26

(15) Part of image is missing.

See page 1-4-26

(16) Fusing is loose.

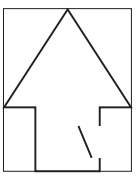

See page 1-4-26

(17) Image is out of focus.

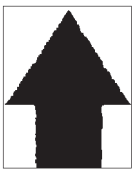

See page 1-4-27

(18) Image center does not align with the original center.

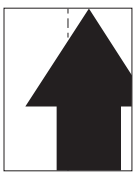

See page 1-4-27

(1) No image appears (entirely white).

Print example	Causes		Check procedures/corrective measures
	Defective transfer bias output.	Defective connector cable or poor contact in the connector.	Reinsert the connector. Also check for continuity within the connector cable. If none, replace the cable. High voltage PWB and engine PWB (YC10)
		Defective high voltage PWB.	Replace the high voltage PWB (see page 1-5-36).
		Defective engine PWB.	Replace the engine PWB (see page 1-5-34).
	Defective developer bias output.	Defective connector cable or poor contact in the connector.	Reinsert the connector. Also check for continuity within the connector cable. If none, replace the cable. High voltage PWB and engine PWB (YC10)
		Defective high voltage PWB.	Replace the high voltage PWB (see page 1-5-36).
		Defective engine PWB.	Replace the engine PWB (see page 1-5-34).
	No LSU laser is output.	Defective laser scanner unit.	Replace the laser scanner unit (see page 1-5-23).
		Defective main PWB.	Replace the main PWB (see page 1-5-33).

(2) No image appears (entirely black).

Print example	Causes		Check procedures/corrective measures
	No main charging.	Defective connector cable or poor contact in the connector.	Reinsert the connector. Also check for continuity within the connector cable. If none, replace the cable. High voltage PWB and engine PWB (YC10)
		Defective charger roller unit.	Replace the charger roller unit (see page 1-5-19).
		Defective high voltage PWB.	Replace the high voltage PWB (see page 1-5-36).
		Defective engine PWB.	Replace the engine PWB (see page 1-5-34).
	Exposure lamp fails to light.	Defective connector cable or poor contact in the connector.	Reinsert the connector. Also check for continuity within the connector cable. If none, replace the cable. LED PWB and main PWB (YC112) CCD PWB and main PWB (YC113)
		Defective CCD PWB.	Replace the image scanner unit (see page 1-5-24).
		Defective main PWB.	Replace the main PWB (see page 1-5-33).

(3) Image is too light.

Print example	Causes		Check procedures/corrective measures
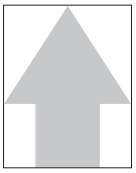	Defective transfer charger output.	Defective connector cable or poor contact in the connector.	Reinsert the connector. Also check for continuity within the connector cable. If none, replace the cable. High voltage PWB and engine PWB (YC10)
		Defective high voltage PWB.	Replace the high voltage PWB (see page 1-5-36).
		Defective engine PWB.	Replace the engine PWB (see page 1-5-34).
	Insufficient toner.		If the display shows the message requesting toner replenishment, replace the container.
	Deteriorated toner.		Perform the drum refresh operation.

(4) The background is colored.

Print example	Causes		Check procedures/corrective measures
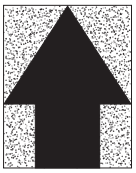	Defective main charger output.	Defective connector cable or poor contact in the connector.	Reinsert the connector. Also check for continuity within the connector cable. If none, replace the cable. High voltage PWB and engine PWB (YC10)
		Defective high voltage PWB.	Replace the high voltage PWB (see page 1-5-36).
		Defective engine PWB.	Replace the engine PWB (see page 1-5-34).
	Deteriorated toner.		Perform the drum refresh operation.

(5) White streaks are printed vertically.

Print example	Causes	Check procedures/corrective measures
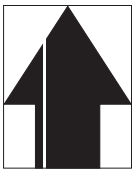	Foreign matter in the developer unit.	Check if the magnetic brush is formed uniformly. Replace the developer unit if any foreign matter (see page 1-5-16).
	Dirty shading plate.	Clean the shading plate.
	Adhesion of soiling to transfer roller.	Clean the transfer roller. Replace the transfer roller if it is extremely dirty (see page 1-5-20).
	Dirty LSU dust shield glass.	Perform the LSU dust shield glass cleaning.

(6) Black streaks are printed vertically.

Print example	Causes	Check procedures/corrective measures
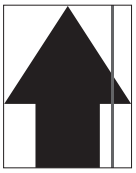	Dirty contact glass.	Clean the contact glass.
	Dirty slit glass.	Clean the slit glass.
	Dirty or flawed drum.	Perform the drum refresh operation. Flawed drum. Replace the drum unit (see page 1-5-19).
	Deformed or worn cleaning blade in the drum unit.	Replace the drum unit (see page 1-5-19).
	Defective transfer roller.	Replace the transfer roller (see page 1-5-20).
	Dirty scanner mirror.	Clean the scanner mirror.

(7) Streaks are printed horizontally.

Print example	Causes	Check procedures/corrective measures
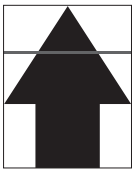	Dirty or flawed drum.	Perform the drum refresh operation. Flawed drum. Replace the drum unit (see page 1-5-19).
	Dirty developer section.	Clean any part contaminated with toner in the developer section.
	Poor contact of grounding terminal of drum unit.	Check the installation of the drum unit. If it operates incorrectly, replace it (see page 1-5-19).

(8) One side of the print image is darker than the other.

Print example	Causes	Check procedures/corrective measures
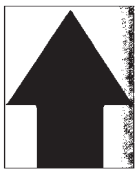	Defective exposure lamp.	Replace the LED PWB (see page 1-5-26).

(9) Spots are printed.

Print example	Causes	Check procedures/corrective measures
	Dirty contact glass.	Clean the contact glass.
	Dirty or flawed drum.	Perform the drum refresh operation. Flawed drum. Replace the drum unit (see page 1-5-19).
	Deformed or worn cleaning blade in the drum unit.	Replace the drum unit (see page 1-5-19).
	Flawed developer roller.	Replace the developer unit (see page 1-5-16).
	Dirty heat roller and press roller.	Clean the heat roller and press roller.

(10) Image is blurred.

Print example	Causes	Check procedures/corrective measures
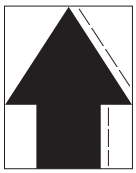	Scanner moves erratically.	Check if there is any foreign matter on the front and rear scanner rails. If any, remove it.
	Deformed press roller.	Replace the fuse unit (see page 1-5-21).
	Paper conveying section drive problem.	Check the gears and belts and, if necessary, grease them.

(11) The leading edge of the image is consistently misaligned with the original.

Print example	Causes	Check procedures/corrective measures
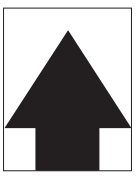	Misadjusted leading edge registration.	Run maintenance mode U034 to readjust the leading edge registration (see page 1-3-18).
	Misadjusted scanner leading edge registration.	Run maintenance mode U066 to readjust the scanner leading edge registration (see page 1-3-27).

(12) The leading edge of the image is sporadically misaligned with the original.

Print example	Causes	Check procedures/corrective measures
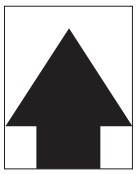	Paper feed clutch, registration clutch or duplex clutch operating incorrectly.	Check the installation of the clutch. If it operates incorrectly, replace it.

(13) Paper is wrinkled.

Print example	Causes	Check procedures/corrective measures
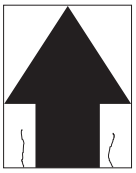	Paper curled.	Check the paper storage conditions.
	Paper damp.	Check the paper storage conditions.
	Defective pressure springs.	Replace the fuser unit (see page 1-5-21).

(14) Offset occurs.

Print example	Causes	Check procedures/corrective measures
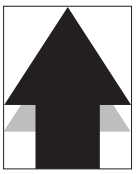	Deformed or worn cleaning blade in the drum unit.	Replace the drum unit (see page 1-5-19).
	Defective fuser unit.	Replace the fuser unit (see page 1-5-21).
	Wrong types of paper.	Check if the paper meets specifications. Replace paper.

(15) Part of image is missing.

Print example	Causes	Check procedures/corrective measures
	Paper damp.	Check the paper storage conditions.
	Paper creased.	Replace the paper.
	Drum condensation.	Perform the drum refresh operation.
	Dirty or flawed drum.	Perform the drum refresh operation. Flawed drum. Replace the drum unit (see page 1-5-19).
	Dirty transfer roller.	Clean the transfer roller. Replace the transfer roller if it is extremely dirty (see page 1-5-20).

(16) Fusing is loose.

Print example	Causes	Check procedures/corrective measures
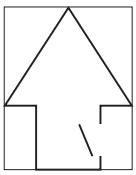	Wrong types of paper.	Check if the paper meets specifications, replace paper.
	Flawed heat roller or press roller.	Replace the fuser unit (see page 1-5-21).
	Defective pressure springs.	
	Defective fuser heater.	

(17) Image is out of focus.

Print example	Causes	Check procedures/corrective measures
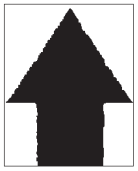	Defective image scanning unit.	Replace the image scanning unit (see page 1-5-24).
	Drum condensation.	Perform the drum refresh operation.

(18) Image center does not align with the original center.

Print example	Causes	Check procedures/corrective measures
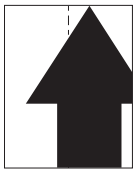	Misadjusted image center line.	Run maintenance item U034 to readjust the center line of image printing (see page 1-3-19).
	Misadjusted scanner center line.	Run maintenance item U067 to readjust the scanner leading edge registration (see page 1-3-28).
	Original is not placed correctly.	Place the original correctly.

1-4-4 Electric problems

If the part causing the problem was not supplied, use the unit including the part for replacement.
Troubleshooting to each failure must be in the order of the numbered symptoms.

Problem	Causes	Check procedures/corrective measures
(1) The machine does not operate when the main power switch is turned on.	1. No electricity at the power outlet.	Measure the input voltage.
	2. The power cord is not plugged in properly.	Check the contact between the power plug and the outlet.
	3. Broken power cord.	Check for continuity. If none, replace the cord.
	4. Defective main power switch.	Check for continuity across the contacts. If none, replace the power switch.
	5. Defective interlock switch.	Check for continuity across the contacts of interlock switch. If none, replace the power source PWB (see page 1-5-34).
	6. Defective power source PWB.	Replace the power source PWB (see page 1-5-34).
(2) Eject motor does not operate.	1. Defective connector cable or poor contact in the connector.	Reinsert the connector. Also check for continuity within the connector cable. If none, replace the cable. Eject motor and engine PWB (YC6)
	2. Defective drive transmission system.	Check if the rollers and gears rotate smoothly. If not, grease the bushes and gears. Check for broken gears and replace if any.
	3. Defective motor.	Replace the eject motor.
	4. Defective PWB.	Replace the engine PWB and check for correct operation (see page 1-5-34).
(3) Power source fan motor does not operate.	1. Defective connector cable or poor contact in the connector.	Reinsert the connector. Also check for continuity within the connector cable. If none, replace the cable. Power source fan motor and main PWB (YC22)
	2. Defective motor.	Replace the power source fan motor.
	3. Defective PWB.	Replace the engine PWB and check for correct operation (see page 1-5-34).
(4) Eject fan motor does not operate.	1. Defective connector cable or poor contact in the connector.	Reinsert the connector. Also check for continuity within the connector cable. If none, replace the cable. Eject fan motor and engine PWB (YC4)
	2. Defective motor.	Replace the eject fan motor.
	3. Defective PWB.	Replace the engine PWB and check for correct operation (see page 1-5-34).

Problem	Causes	Check procedures/corrective measures
(5) Controller fan motor does not operate.	1. Defective connector cable or poor contact in the connector.	Reinsert the connector. Also check for continuity within the connector cable. If none, replace the cable. Controller fan motor and main PWB (YC41)
	2. Defective motor.	Replace the controller fan motor.
	3. Defective PWB.	Replace the main PWB and check for correct operation (see page 1-5-33).
(6) ISU motor does not operate.	1. Defective connector cable or poor contact in the connector.	Reinsert the connector. Also check for continuity within the connector cable. If none, replace the cable. ISU motor and engine PWB (YC14)
	2. Defective drive transmission system.	Check if the rollers and gears rotate smoothly. If not, grease the bushes and gears. Check for broken gears and replace if any.
	3. Defective motor.	Replace the ISU motor.
	4. Defective PWB.	Replace the engine PWB and check for correct operation (see page 1-5-34).
(7) Paper feed clutch does not operate.	1. Defective connector cable or poor contact in the connector.	Reinsert the connector. Also check for continuity within the connector cable. If none, replace the cable. Paper feed clutch and engine PWB (YC1)
	2. Defective clutch.	Replace the paper feed clutch.
	3. Defective PWB.	Replace the engine PWB and check for correct operation (see page 1-5-34).
(8) Registration clutch does not operate.	1. Defective connector cable or poor contact in the connector.	Reinsert the connector. Also check for continuity within the connector cable. If none, replace the cable. Registration clutch and engine PWB (YC1)
	2. Defective clutch.	Replace the registration clutch.
	3. Defective PWB.	Replace the engine PWB and check for correct operation (see page 1-5-34).
(9) Duplex clutch does not operate.	1. Defective connector cable or poor contact in the connector.	Reinsert the connector. Also check for continuity within the connector cable. If none, replace the cable. Duplex clutch and engine PWB (YC1)
	2. Defective clutch.	Replace the duplex clutch.
	3. Defective PWB.	Replace the engine PWB and check for correct operation (see page 1-5-34).
(10) MP solenoid does not operate.	1. Defective connector cable or poor contact in the connector.	Reinsert the connector. Also check for continuity within the connector cable. If none, replace the cable. MP solenoid and engine PWB (YC1)
	2. Defective solenoid.	Replace the MP solenoid.
	3. Defective PWB.	Replace the engine PWB and check for correct operation (see page 1-5-34).

Problem	Causes	Check procedures/corrective measures
(11) Feedshift solenoid does not operate.	1. Defective connector cable or poor contact in the connector.	Reinsert the connector. Also check for continuity within the connector cable. If none, replace the cable. Feedshift solenoid and engine PWB (YC5)
	2. Defective solenoid.	Replace the Feedshift solenoid.
	3. Defective PWB.	Replace the engine PWB and check for correct operation (see page 1-5-34).
(12) The message requesting paper to be loaded is shown when paper is present on the cassette.	1. Defective connector cable or poor contact in the connector.	Reinsert the connector. Also check for continuity within the connector cable. If none, replace the cable. Paper sensor and engine PWB (YC2)
	2. Deformed actuator of the paper sensor.	Check visually and replace if necessary.
	3. Defective paper sensor.	Replace the cassette PWB.
	4. Defective PWB.	Replace the engine PWB and check for correct operation (see page 1-5-34).
(13) The message requesting paper to be loaded is shown when paper is present on the MP tray.	1. Defective connector cable or poor contact in the connector.	Reinsert the connector. Also check for continuity within the connector cable. If none, replace the cable. MP paper sensor and engine PWB (YC3)
	2. Deformed actuator of the MP paper sensor.	Check visually and replace if necessary.
	3. Defective MP paper sensor.	Replace the MP paper sensor.
	4. Defective PWB.	Replace the engine PWB and check for correct operation (see page 1-5-34).
(14) The size of paper on the cassette is not displayed correctly.	1. Defective connector cable or poor contact in the connector.	Reinsert the connector. Also check for continuity within the connector cable. If none, replace the cable. Paper size width switch and engine PWB (YC2) Paper size length switch and engine PWB (YC2)
	2. Defective cassette size switch.	Replace the paper size width switch or paper size length switch.
	3. Defective PWB.	Replace the engine PWB and check for correct operation (see page 1-5-34).
(15) A paper jam in the paper feed, paper conveying or eject section is indicated when the main power switch is turned on.	1. A piece of paper torn from paper is caught around registration sensor, duplex sensor , feed sensor or eject sensor.	Check visually and remove it, if any.
	2. Defective sensor.	Replace the registration sensor, duplex sensor, feed sensor or eject sensor.

Problem	Causes	Check procedures/corrective measures
(16) A message indicating cover open is displayed when the front cover or right cover is closed.	1. Deformed actuator of the interlock switch.	Check visually and replace if necessary.
	2. Defective interlock switch.	Replace the interlock switch.
(17) The LED lamp does not turn on when original is present on the DP.	1. Defective connector cable or poor contact in the connector.	Reinsert the connector. Also check for continuity within the connector cable. If none, replace the cable. DP original sensor and DP main PWB (YC3) DP main PWB (YC1) and engine PWB (YC18)
	2. Defective DP original sensor.	Replace the DP original sensor.
	3. Defective PWB.	Replace the DPLED PWB and check for correct operation.
		Replace the engine PWB and check for correct operation (see page 1-5-34).
(18) The size of original on the DP is not displayed correctly.	1. Defective connector cable or poor contact in the connector.	Reinsert the connector. Also check for continuity within the connector cable. If none, replace the cable. DP original size width sensor and DP main PWB (YC4) DP original size length sensor and DP main PWB (YC2) DP main PWB (YC1) and engine PWB (YC18)
	2. Defective original size sensor.	Replace the DP original size width sensor or DP original size length sensor.
	3. Defective PWB.	Replace the DP main PWB or engine PWB and check for correct operation (see page 1-5-31,1-5-34).
(19) DP paper feed motor does not operate.	1. Defective connector cable or poor contact in the connector.	Reinsert the connector. Also check for continuity within the connector cable. If none, replace the cable. DP paper feed motor and DP main PWB (YC9) DP main PWB (YC1) and engine PWB (YC18)
	2. Defective drive transmission system.	Check if the rollers and gears rotate smoothly. If not, grease the bushes and gears. Check for broken gears and replace if any.
	3. Defective motor.	Replace the DP paper feed motor.
	4. Defective PWB.	Replace the DP main PWB or engine PWB and check for correct operation (see page 1-5-31,1-5-34).
(20) DP switchback motor does not operate.	1. Defective connector cable or poor contact in the connector.	Reinsert the connector. Also check for continuity within the connector cable. If none, replace the cable. DP switchback motor and DP main PWB (YC9) DP main PWB (YC1) and engine PWB (YC18)
	2. Defective drive transmission system.	Check if the rollers and gears rotate smoothly. If not, grease the bushes and gears. Check for broken gears and replace if any.
	3. Defective motor.	Replace the DP switchback motor.
	4. Defective PWB.	Replace the DP main PWB or engine PWB and check for correct operation (see page 1-5-31,1-5-34).

Problem	Causes	Check procedures/corrective measures
(21) DP paper feed clutch does not operate.	1. Defective connector cable or poor contact in the connector.	Reinsert the connector. Also check for continuity within the connector cable. If none, replace the cable. DP paper feed clutch and DP main PWB (YC8) DP main PWB (YC1) and engine PWB (YC18)
	2. Defective clutch.	Replace the DP paper feed clutch.
	3. Defective PWB.	Replace the DP main PWB or engine PWB and check for correct operation (see page 1-5-31,1-5-34).
(22) DP registration clutch does not operate.	1. Defective connector cable or poor contact in the connector.	Reinsert the connector. Also check for continuity within the connector cable. If none, replace the cable. DP registration clutch and DP main PWB (YC8) DP main PWB (YC1) and engine PWB (YC18)
	2. Defective clutch.	Replace the DP registration clutch.
	3. Defective PWB.	Replace the DP main PWB or engine PWB and check for correct operation (see page 1-5-31,1-5-34).
(23) An original jams when the main power switch is turned on.	1. A piece of paper torn from an original is caught around the DP paper feed sensor, DP registration sensor or DP timing sensor.	Check visually and remove it, if any.
	2. Defective sensor.	Replace the DP paper feed sensor, DP registration sensor or DP timing sensor.
(24) A message indicating cover open is displayed when the DP top cover is closed.	1. Defective connector cable or poor contact in the connector.	Reinsert the connector. Also check for continuity within the connector cable. If none, replace the cable. DP open/close sensor and DP main PWB (YC5) DP main PWB (YC1) and engine PWB (YC18)
	2. Defective DP open/close sensor.	Replace the DP open/close sensor.

1-4-5 Mechanical problems

If the part causing the problem was not supplied, use the unit including the part for replacement.

Problem	Causes/check procedures	Corrective measures
(1) No primary paper feed.	Check if the surfaces of the following rollers are dirty with paper powder. Pickup roller Paper feed roller MP paper feed roller	Clean with isopropyl alcohol.
	Check if the following rollers is deformed. Pickup roller Paper feed roller MP paper feed roller	Check visually and replace any deformed (see page 1-5-10, 1-5-11).
	Defective paper feed clutch installation.	Check visually and remedy if necessary.
(2) No secondary paper feed.	Check if the surfaces of the following rollers are dirty with paper powder. Upper registration roller Lower registration roller	Clean with isopropyl alcohol.
	Defective registration clutch installation.	Check visually and remedy if necessary.
(3) Skewed paper feed.	Paper width guide in a cassette installed incorrectly.	Check the paper width guide visually and remedy or replace if necessary.
(4) Multiple sheets of paper are fed.	Check if the paper is excessively curled.	Change the paper.
	Paper is loaded incorrectly.	Load the paper correctly.
	Check if the retard roller is worn.	Replace the retard roller if it is worn (see page 1-5-10).
(5) Paper jams.	Check if the paper is excessively curled.	Change the paper.
	Check if the contact between the upper and lower registration rollers is correct.	Check visually and remedy if necessary.
	Check if the heat roller or press roller is extremely dirty or deformed.	Check visually and replace the fuser unit (see page 1-5-21).
(6) Toner drops on the paper conveying path.	Check if the drum unit or developer unit is extremely dirty.	Clean the drum unit or developer unit.
(7) Abnormal noise is heard.	Check if the rollers, pulleys and gears operate smoothly.	Grease the bushes and gears.
	Check if the following clutches are installed correctly. Paper feed clutch Registration clutch Duplex clutch	Check visually and remedy if necessary.

Problem	Causes/check procedures	Corrective measures
(8) No primary original feed.	Check if the surfaces of the following pulleys are dirty with paper powder. DP forwarding pulley DP paper feed roller	Clean with isopropyl alcohol.
	Check if the following pulleys is deformed. DP forwarding pulley DP paper feed roller	Check visually and replace any deformed (see page 1-5-29).
(9) Multiple sheets of original are fed.	Original is not correctly set.	Set the original correctly.
	Check if the DP separation pulley is worn.	Replace the DP separation pulley if it is worn (see page 1-5-29).
(10) Originals jam.	Originals outside the specifications are used.	Use only originals conforming to the specifications.
	Check if the surfaces of the following pulleys are dirty with paper powder. DP forwarding pulley DP paper feed roller	Clean with isopropyl alcohol.
	Check if the contact between the registration roller and registration pulley is correct.	Check visually and remedy if necessary.
	Check if the contact between the conveying roller and conveying pulley is correct.	Check visually and remedy if necessary.
	Check if the contact between the eject roller and eject pulley is correct.	Check visually and remedy if necessary.
	Check if the contact between the switchback roller and switchback pulley is correct.	Check visually and remedy if necessary.

1-4-6 Send error code

This section describes the scanning errors and descriptions, preventive actions, as well as corrective actions.
Error codes not described here could fall within software errors.
If such an error is encountered, turn power off then on, and advise the service representative.

(1) Scan to SMB error codes

Code	Contents	Check procedures/corrective measures
1101	Host destined does not exist on the network.	1. Confirm destined host. 2. Confirm device's network parameters. 3. Confirm the network parameters the device is connected.
1102	Login to the host has failed.	1. Confirm user name and passowrd. 2. Confirm the network parameters the device is connected. 3. Check the host if the folder is properly shared.
1103	Destined host, folder, and/or file names are invalid.	1. Check illegal characters are not contained within these names. 2. Check the name of the folder and files conform with the naming syntax. 3. Confirm destined host and folder.
1105	SMB protocol is not enabled.	1. Confirm device's SMB protocols.
2101	Login to the host has failed.	1. Confirm destined host. 2. Confirm that the LAN cable is properly connected to the device. 3. Check the SMB port number. 4. Confirm device's network parameters. 5. Confirm the network parameters the device is connected.
2201	Writing scanned data has failed.	1. Check the scanning file name. 2. Confirm device's network parameters. 3. Confirm the network parameters the device is connected.

(2) Scan to FTP error codes

Code	Contents	Check procedures/corrective measures
1101	FTP server does not exist on the network.	1. Check the FTP server name. 2. Confirm device's network parameters. 3. Confirm the network parameters the device is connected.
1102	Login to the FTP server has failed.	1. Confirm user name and passowrd. 2. Check the FTP server name.
1103	Destined folder is invalid.	1. Check illegal characters are not contained within these names. 2. Check the FTP server name.
1105	FTP protocol is not enabled.	1. Confirm device's FTP protocols.
1131	Initializing TLS has failed.	1. Confirm device's security parameters.
1132	TLS negotiation has failed.	1. Confirm device's security parameters. 2. Check the FTP server name.
2101	Access to the FTP server has failed.	1. Check the FTP server name. 2. Confirm that the LAN cable is properly connected to the device. 3. Check the FTP port number. 4. Confirm device's network parameters. 5. Confirm the network parameters the device is connected. 6. Check the FTP server name.
2102	Access to the FTP server has failed. (Connection timeout)	1. Check the FTP server name. 2. Check the FTP port number. 3. Confirm device's network parameters. 4. Confirm the network parameters the device is connected. 5. Check the FTP server name.
2201	Connection with the FTP server has failed.	1. Confirm device's network parameters. 2. Confirm the network parameters the device is connected. 3. Confirm destined folder. 4. Check the FTP server name.
2202	Connection with the FTP server has failed. (Timeout)	1. Confirm device's network parameters. 2. Confirm the network parameters the device is connected.
2231	Connection with the FTP server has failed. (FTPS communication)	1. Confirm device's network parameters. 2. Confirm the network parameters the device is connected.
3101	FTP server responded with an error.	1. Confirm device's network parameters. 2. Confirm the network parameters the device is connected. 3. Check the FTP server.

(3) Scan to E-mail error codes

Code	Contents	Check procedures/corrective measures
1101	SMTP/POP3 server does not exist on the network.	1. Check the SMTP/POP3 server name. 2. Confirm device's network parameters. 3. Confirm the network parameters the device is connected.
1102	Login to the SMTP/POP3 server has failed.	1. Confirm user name and passowrd. 2. Check the SMTP/POP3 server.
1104	The domain the destinede address belongs is prohibited by scanning restriction.	1. Confirm device's SMTP parameters.
1105	SMTP protocol is not enabled.	1. Confirm device's SMTP protocols.
1106	Sender’s address is not specified.	1. Confirm device's SMTP protocols.
2101	Connection to the SMTP/POP3 server has failed.	1. Check the SMTP/POP3 server name. 2. Confirm that the LAN cable is properly connected to the device. 3. Check the SMTP/POP3 port number. 4. Confirm device's network parameters. 5. Confirm the network parameters the device is connected. 6. Check the SMTP/POP3 server.
2102	Connection to the SMTP/POP3 server has failed. (Connection timeout)	1. Check the SMTP/POP3 server name. 2. Check the SMTP/POP3 port number. 3. Confirm device's network parameters. 4. Confirm the network parameters the device is connected. 5. Check the SMTP/POP3 server.
2201	Connection to the SMTP/POP3 server has failed.	1. Confirm device's network parameters. 2. Confirm the network parameters the device is connected.
2202	Connection to the SMTP/POP3 server has failed. (Timeout)	1. Confirm device's network parameters. 2. Confirm the network parameters the device is connected.
2204	The size of scanning exceeded its limit.	1. Confirm device's network parameters.
3101	SMTP/POP3 server responded with an error.	1. Confirm device's network parameters. 2. Confirm the network parameters the device is connected. 3. Check the SMTP/POP3 server.
3201	No SMTP authentication is found.	1. Check the SMTP server. 2. The device supports SMTP authentication services including CRAM-MD5, DIGEST-MD5, PLAIN and LOGIN.

This page is intentionally left blank.

1-5-1 Precautions for assembly and disassembly

(1) Precautions

Before starting disassembly, press the Power key on the operation panel to off. Make sure that the Power lamp is off before turning off the main power switch. Unplug the power cable from the wall outlet.
When the fax kit is installed, be sure to disconnect the modular code before starting disassembly.
When handling PWBs (printed wiring boards), do not touch parts with bare hands.
The PWBs are susceptible to static charge.
Do not touch any PWB containing ICs with bare hands or any object prone to static charge.
When removing the hook of the connector, be sure to release the hook.
Take care not to get the cables caught.
To reassemble the parts, use the original screws. If the types and the sizes of screws are not known, refer to the PARTS LIST.

(2) Drum unit

Note the following when handling or storing the drum unit.
When removing the drum unit, never expose the drum surface to strong direct light.
Keep the drum unit at an ambient temperature between -20°C/-4°F and 40°C/104°F and at a relative humidity not higher than 85% RH. Avoid abrupt changes in temperature and humidity.
Avoid exposure to any substance which is harmful to or may affect the quality of the drum unit.
Do not touch the drum surface with any object. Should it be touched by hands or stained with oil, clean it.

(3) Toner

Store the toner container in a cool, dark place.
Avoid direct light and high humidity.

(4) How to tell a genuine Kyocera Mita toner container

As a means of brand protection, the Kyocera Mita toner container utilizes an optical security technology to enable visual validation. A validation viewer is required to accomplish this.

Hold the validation viewer over the left side part of the brand protection seal on the toner container. Through each window of the validation viewer, the left side part of the seal should be seen as follows:

A black-colored band when seen through the left side window (●)

A shiny or gold-colored band when seen through the right side window (☼)

The above will reveal that the toner container is a genuine Kyocera Mita branded toner container, otherwise, it is a counterfeit.

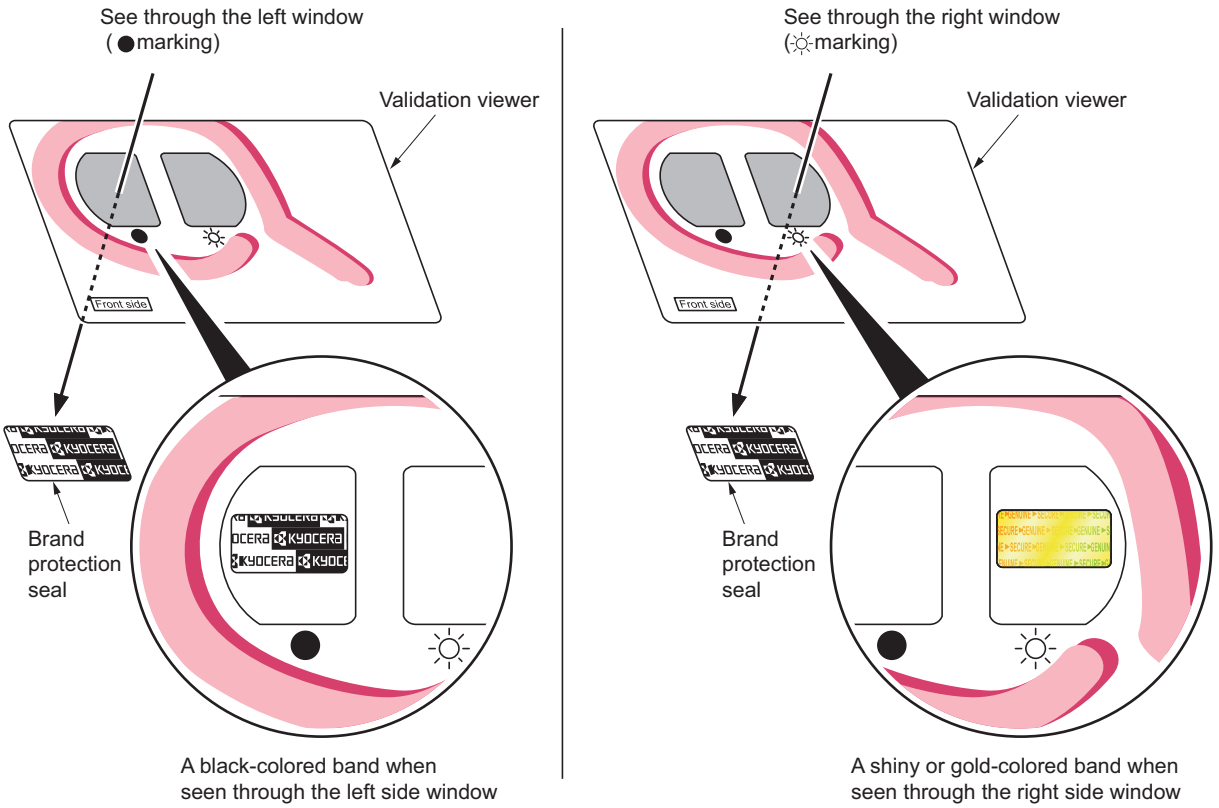

Figure 1-5-1

The brand protection seal has an incision as shown below to prohibit reuse.

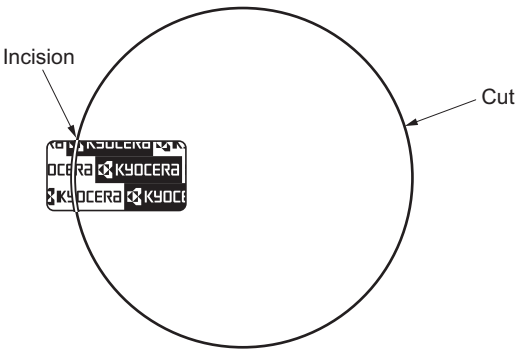

Figure 1-5-2

1-5-2 Outer covers

(1) Detaching and refitting the front cover

Procedure

1. Remove the cassette.
   (See page 1-5-10)
2. Open the front cover.

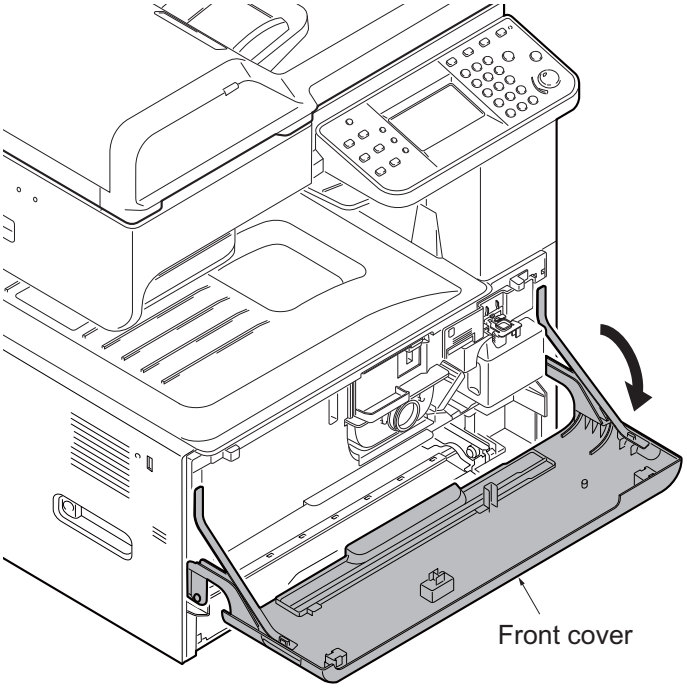

Figure 1-5-3

3. Unhitch the straps by squeezing the hooks inward as shown.

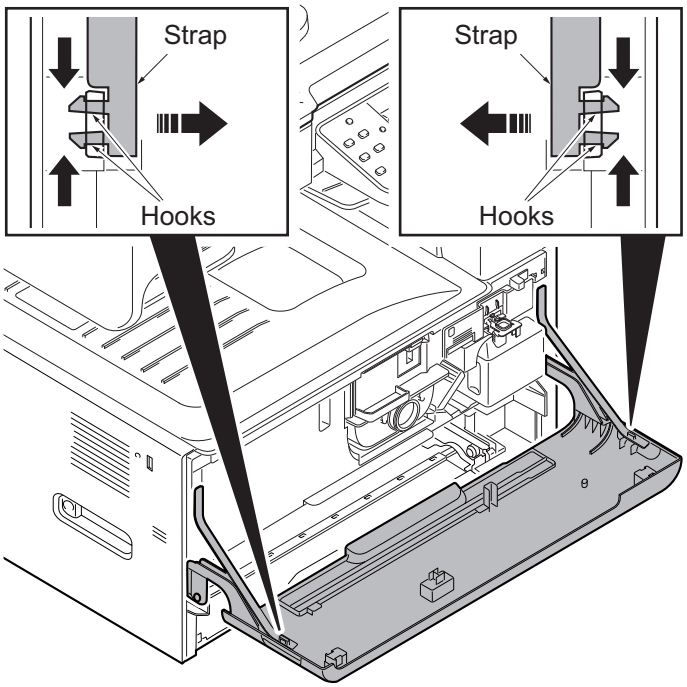

Figure 1-5-4

4. Remove two fulcrum axes of the front cover.
5. Remove the front cover.

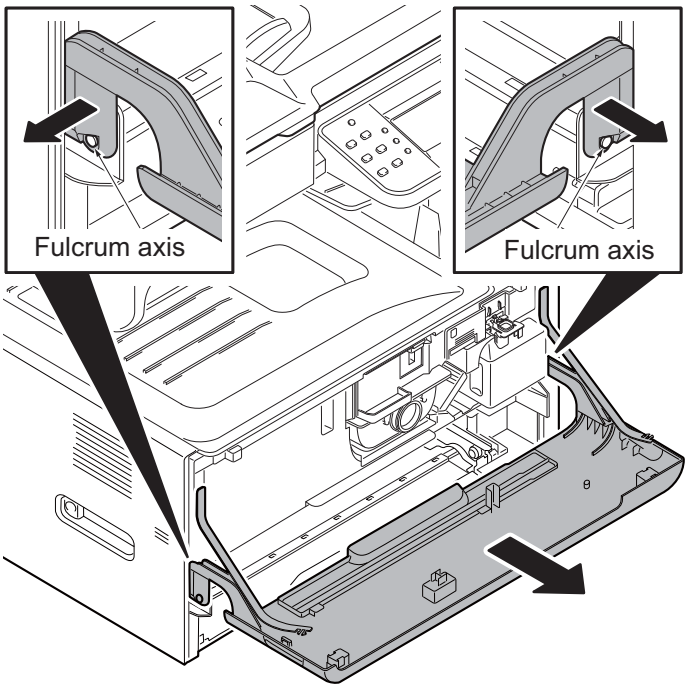

Figure 1-5-5

(2) Detaching and refitting the rear cover

Procedure

1. Remove the power cord.
   If the document feeder is installed, remove its interface connector.
2. Remove two screws of the DP interface connector and then remove the DP interface connector.
   (See page 1-5-28)
3. Remove the controller box cover.
4. Remove six screws.
5. Pull the rear cover upwards and then release three hooks.
6. Remove the rear cover.

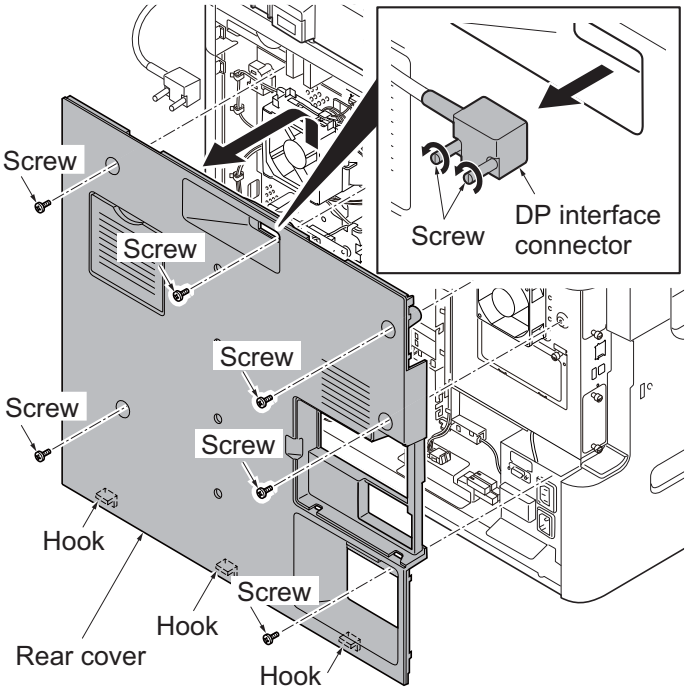

Figure 1-5-6

(3) Detaching and refitting the inner tray

Procedure

1. Release the lock lever and then remove the job separator tray.

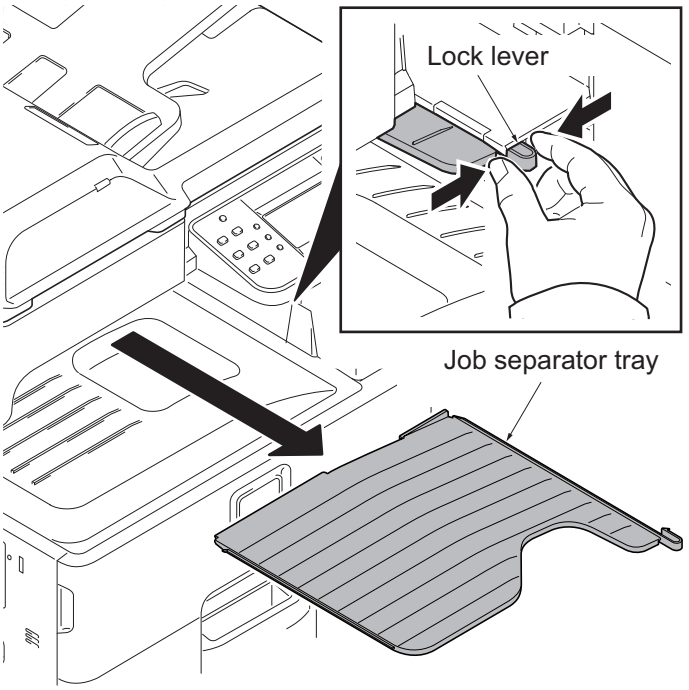

Figure 1-5-7

2. Remove the cassette. (See page 1-5-10)
3. Open the front cover.(See page 1-5-3)
4. Remove two screws.
5. Release three hooks A.
6. Pull the left lower cover upwards and then release nine hooks B.
7. Remove the left lower cover.

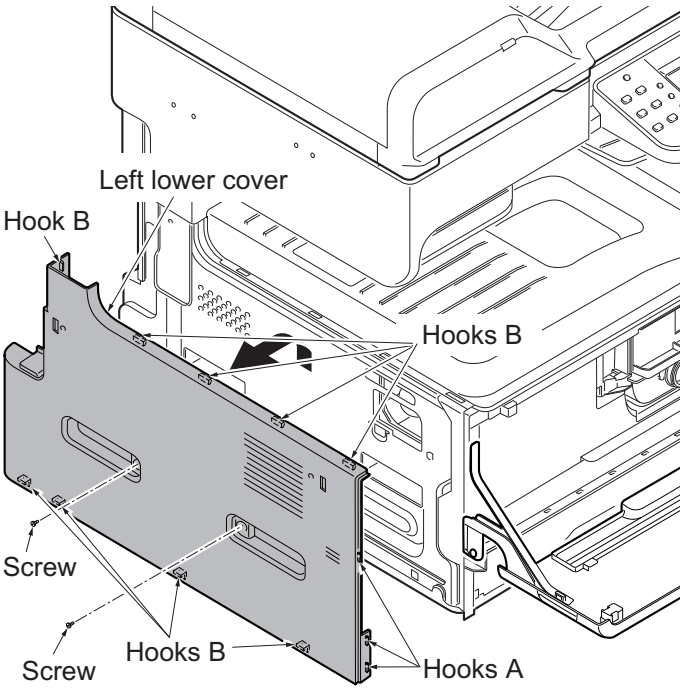

Figure 1-5-8

8. Release two hooks of the front upper cover.
9. Tilt the front upper cover forward.

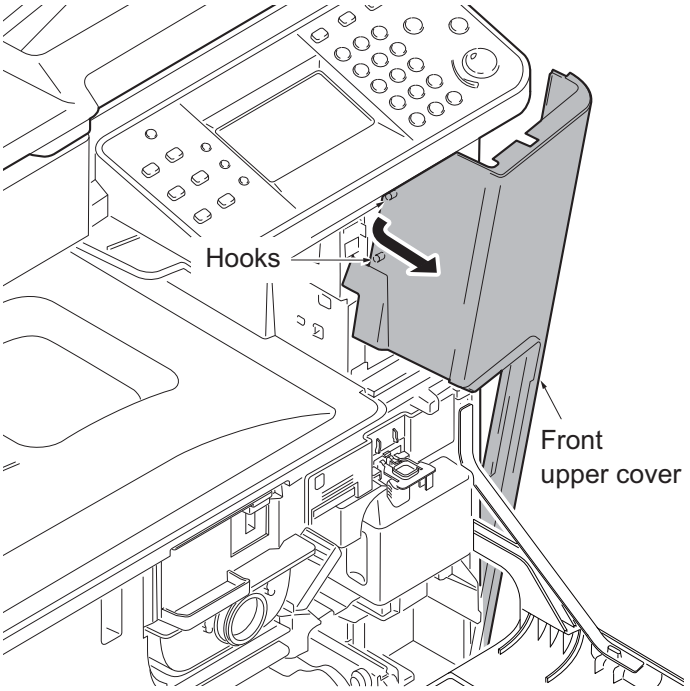

Figure 1-5-9

10. Remove the inner tray.

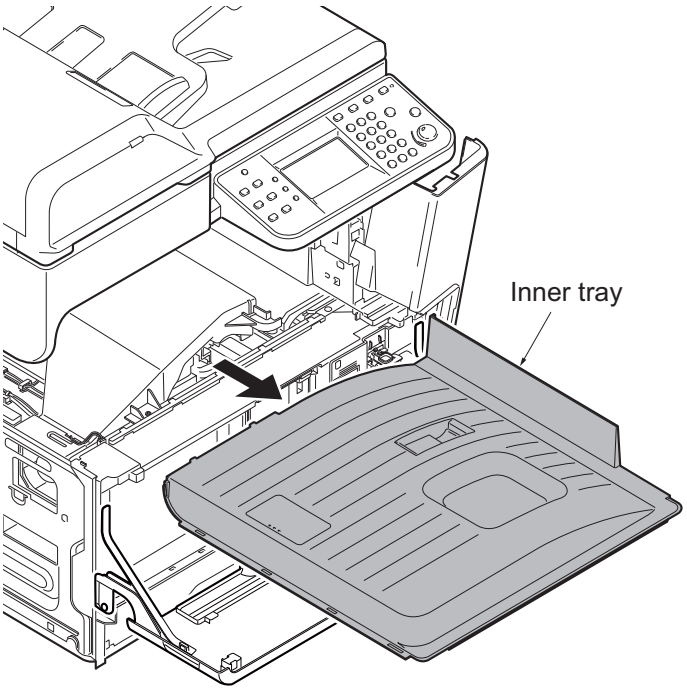

Figure 1-5-10

(4) Detaching and refitting the eject rear cover

Procedure

1. Release the hook by using a flat screwdriver and then remove the tray left cover.

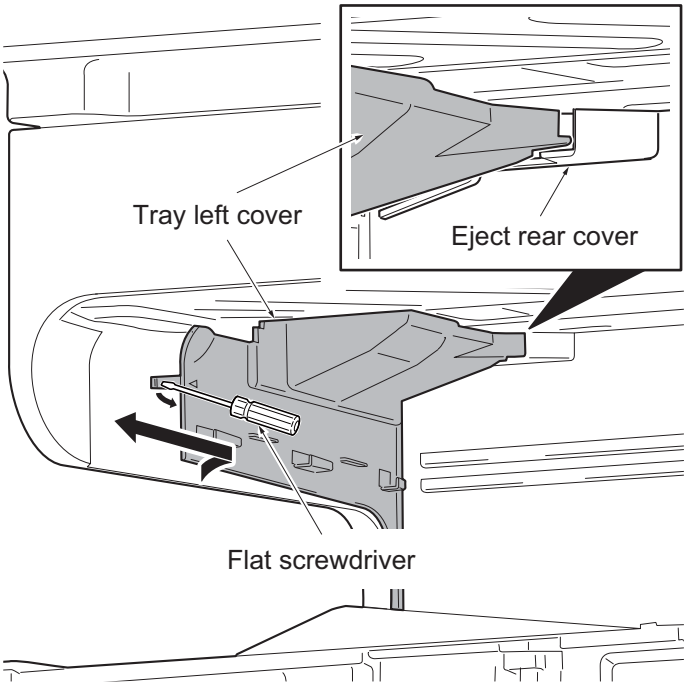

Figure 1-5-11

2. Release the hook of the left upper cover at the rear side.
3. Pull the left upper cover upwards and then release three hooks.
4. Remove the left upper cover.

   ATTENTION: At the time of replace the left upper cover, confirm the position of the scaner lock lever .

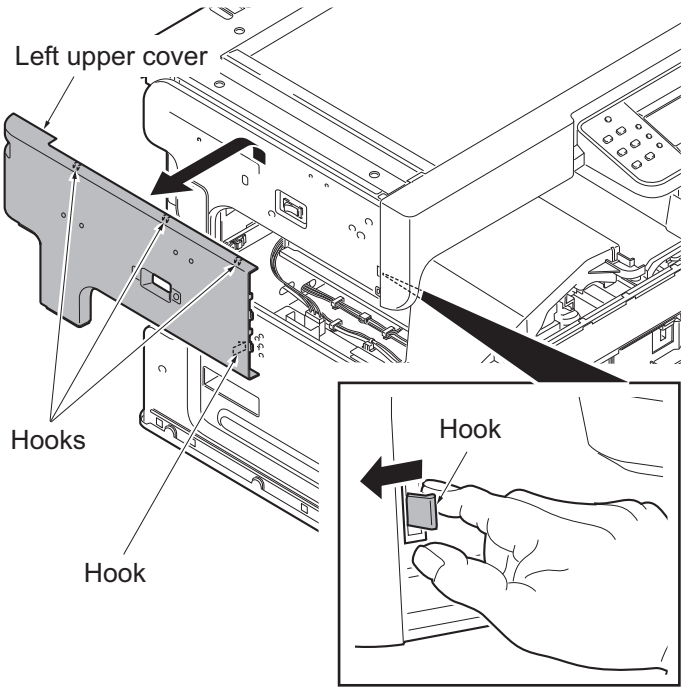

Figure 1-5-12

5. Remove the eject upper cover while supporting the rear tray cover.

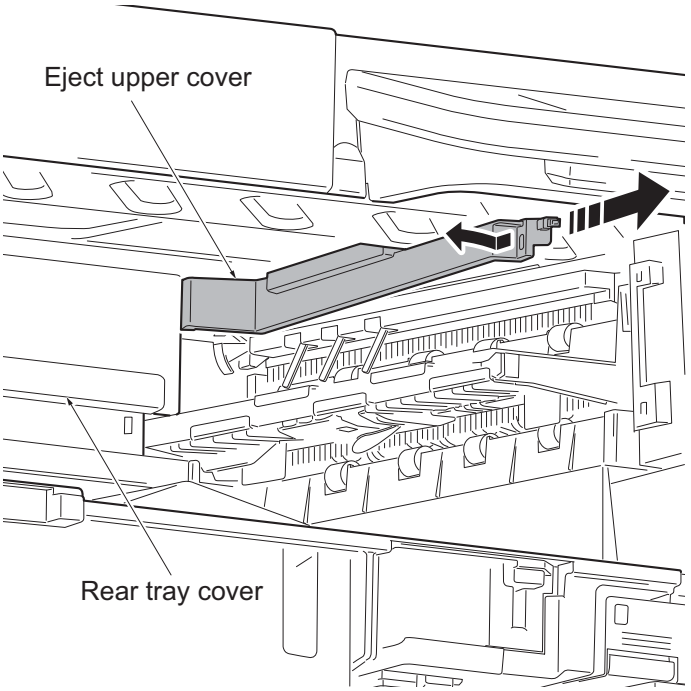

Figure 1-5-13

6. Remove the rear tray cover.

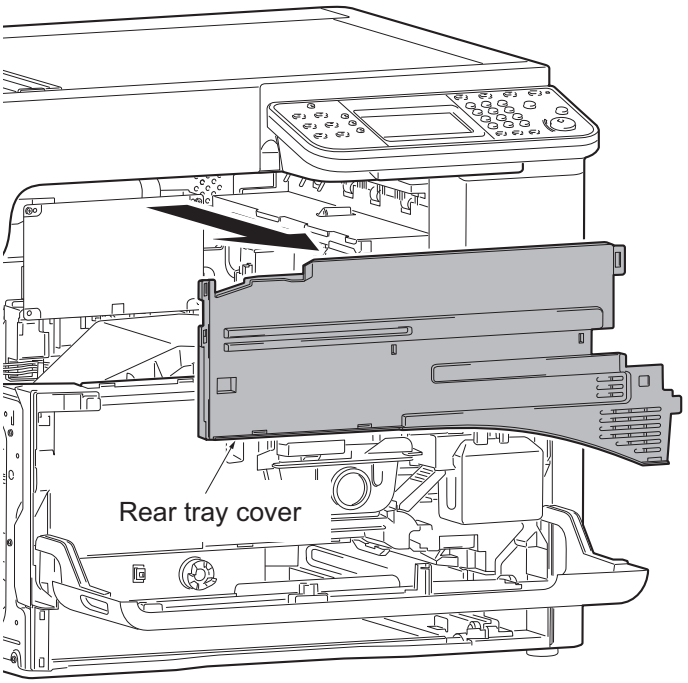

Figure 1-5-14

1-5-3 Paper feed section

(1) Detaching and refitting the primary paper feed unit

Procedure

1. Remove the cassette.

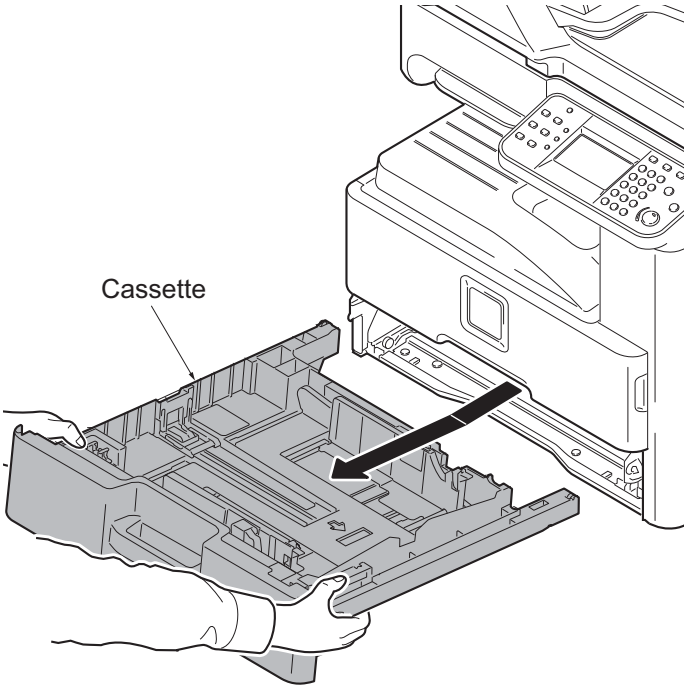

Figure 1-5-15

2. Release the feed lever (yellow) and then remove the primary feed unit.
3. Check or replace the primary paper feed unit and refit all the removed parts.

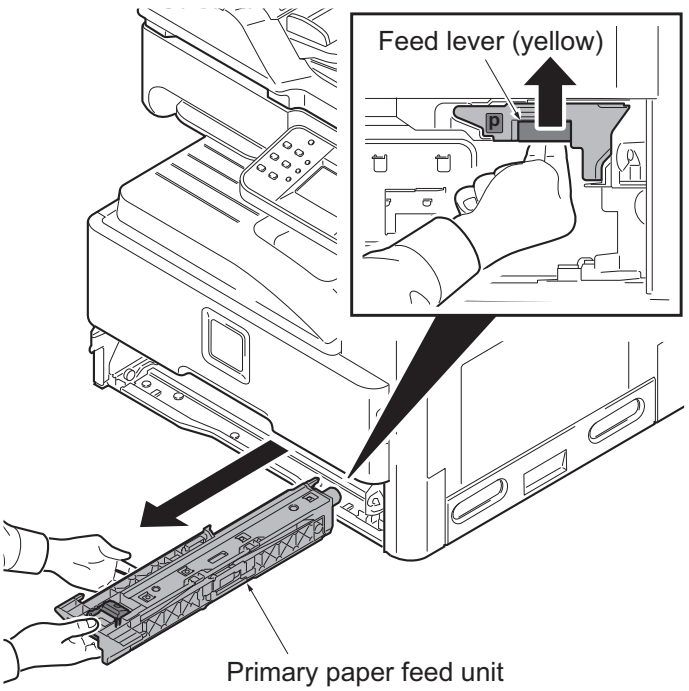

Figure 1-5-16

(2) Detaching and refitting the MP paper feed roller and MP separation pad

Procedure

1. Open the right cover 1.

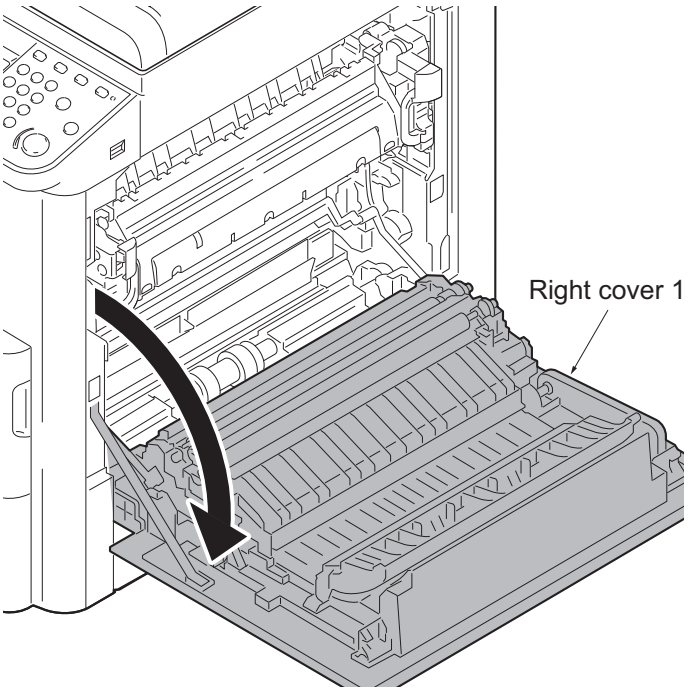

Figure 1-5-17

2. While squeezing the holder inward, remove the MP feed roller.

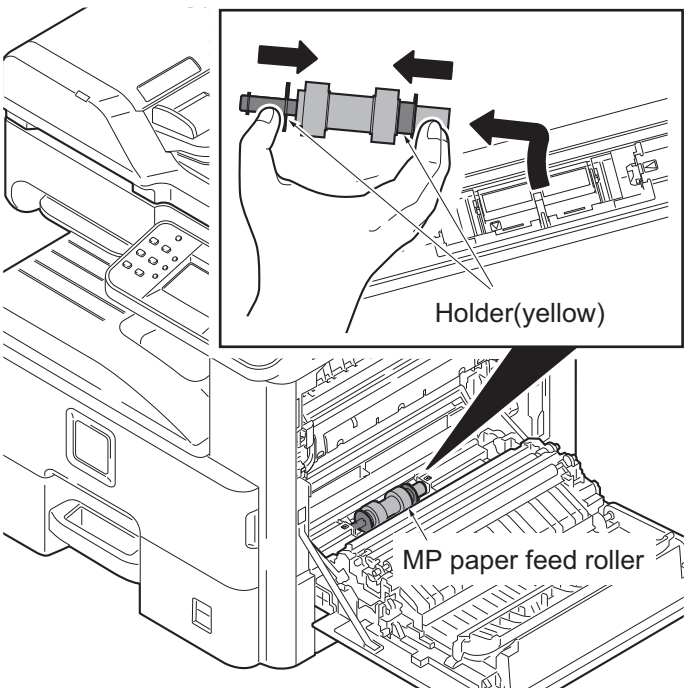

Figure 1-5-18

3. Tilt the MP separation pad forward and then remove it upwards.
4. Check or replace the MP paper feed roller and MP separation pad and refit all the removed parts.

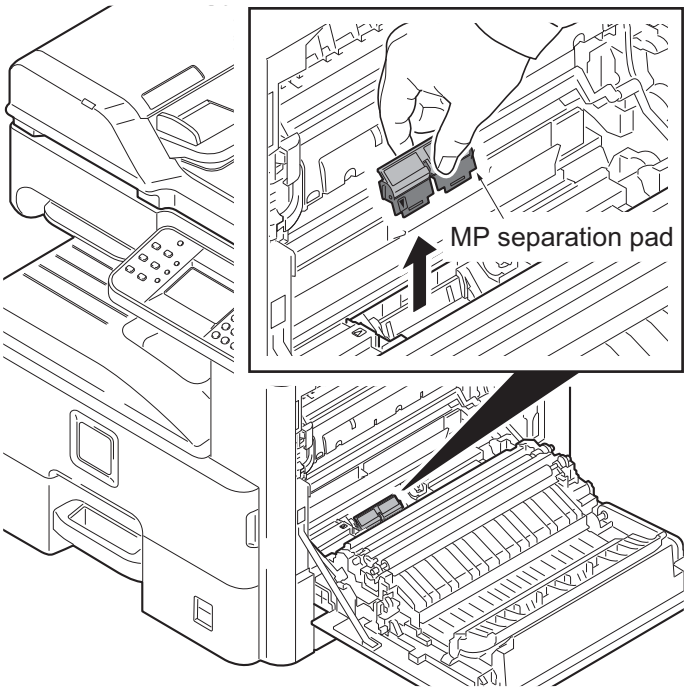

Figure 1-5-19

(3) Detaching and refitting the registration roller

Procedure

1. Open the right cover 1 (See page 1-5-11).
2. Remove the conveyning unit. (See page 1-5-38)
3. Release four hooks and then remove the feed guide A from the conveying unit.

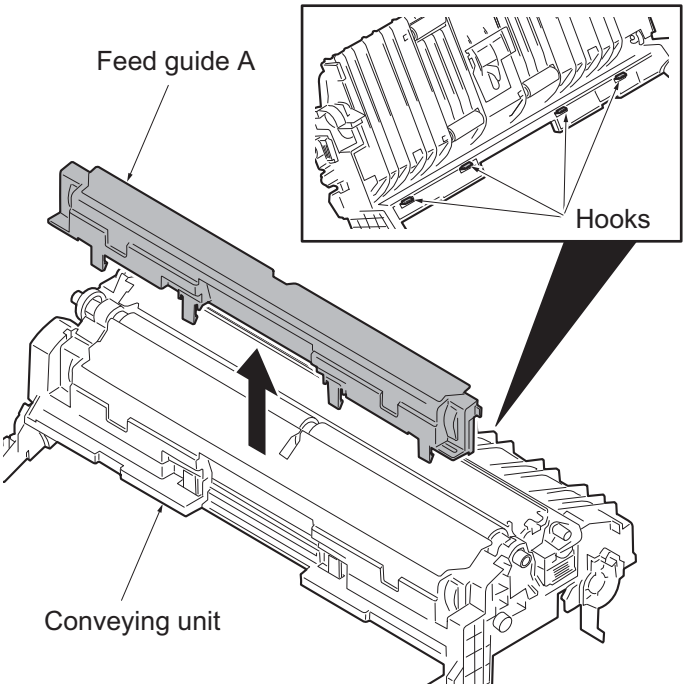

Figure 1-5-20

4. Release eight hooks and then remove the duplex conveying guide from the conveying unit.

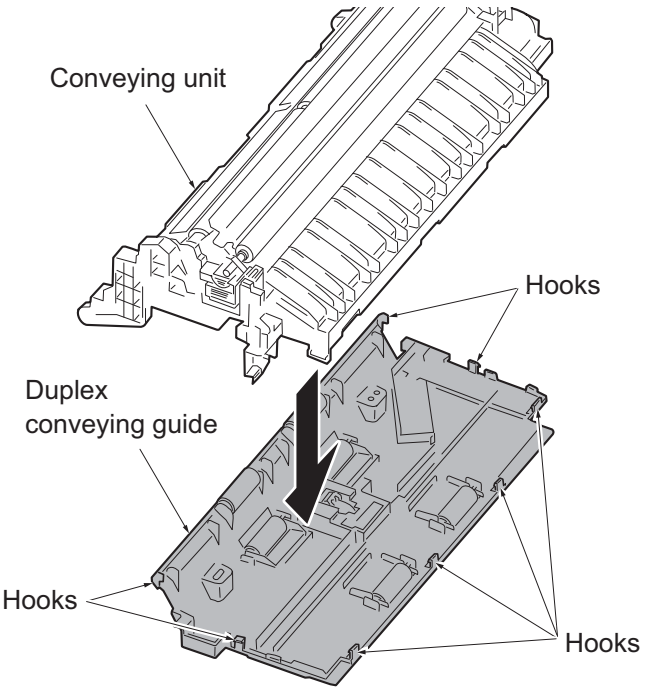

Figure 1-5-21

5. Remove a spring in the middle at the back of the conveying unit.

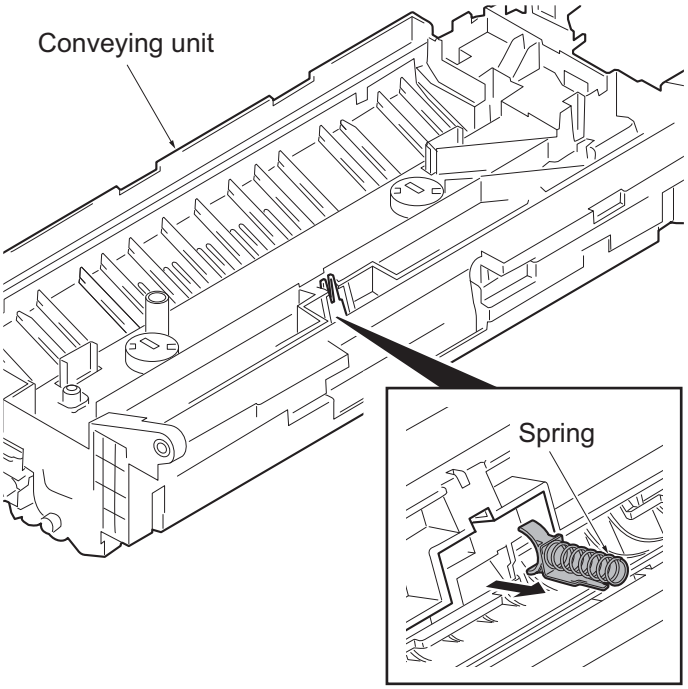

Figure 1-5-22

6. Remove the transfer roller unit. (See page 1-5-20)
7. Remove two springs at the front and back of the registration roller.
8. Remove the cap and gear.
9. Slide and remove the registration roller.
10. Check or replace the registration roller and refit all the removed parts.

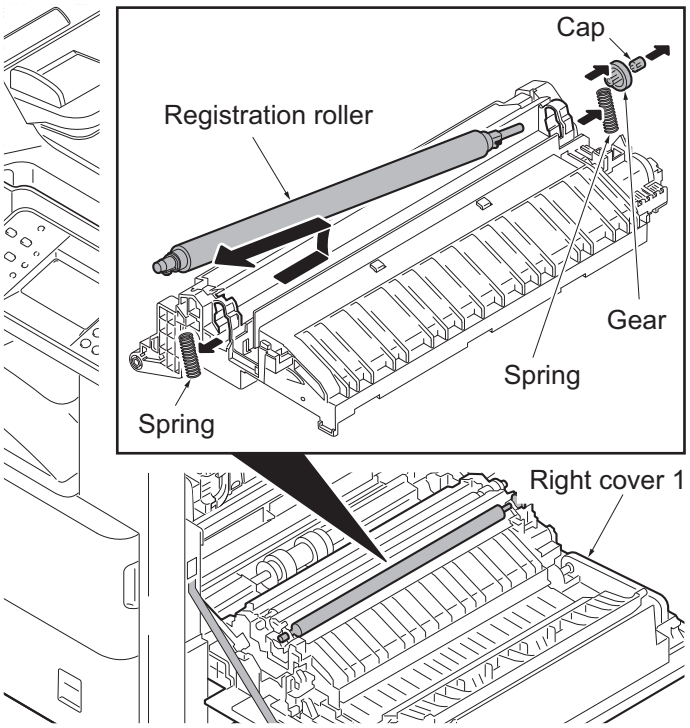

Figure 1-5-23

(4) Detaching and refitting the registration cleaner

Procedure

1. Open the right cover 1.
   (See page 1-5-11)
2. Open the front cover. (See page 1-5-3)
3. Open the developing cover.
   (See page 1-5-17)
4. Set the cleaner lever (yellow) up and draw the registration cleaner frontward.
5. Check or replace the registration cleaner and refit all the removed parts.

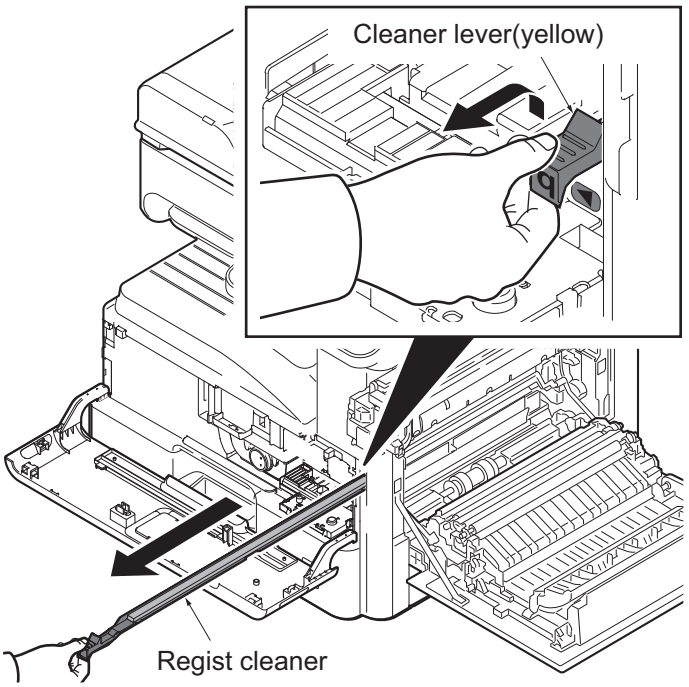

Figure 1-5-24

(5) Detaching and refitting the MP tray

Procedure

1. Open the MP tray.
2. Release two fulcrums of the MP tray by using a flat screwdriver.
3. Pull two straps upwards to remove.
4. Remove the MP tray.

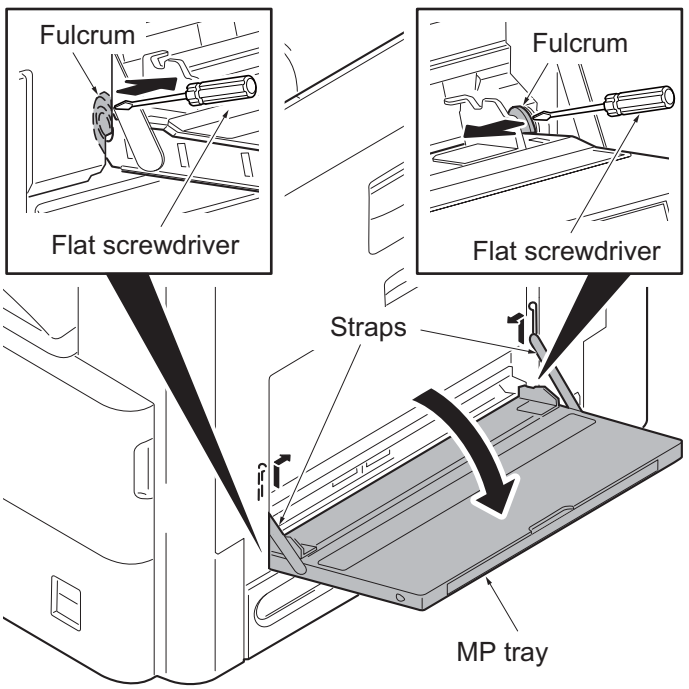

Figure 1-5-25

1-5-4 Developing section

(1) Detaching and refitting the developing unit

Procedure

1. Open the front cover. (See page 1-5-3)
2. Release the lock lever and then remove the waste toner box.

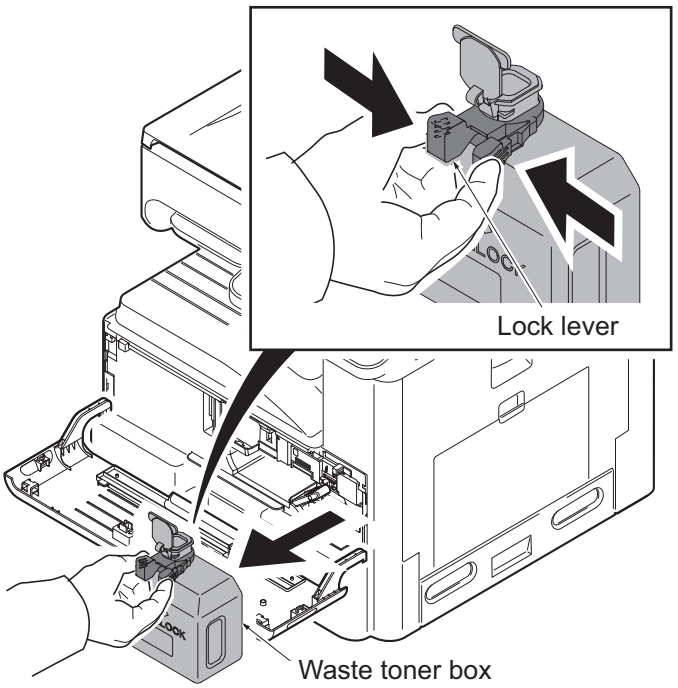

Figure 1-5-26

3. Release the toner container lever (blue) and then remove the toner container.

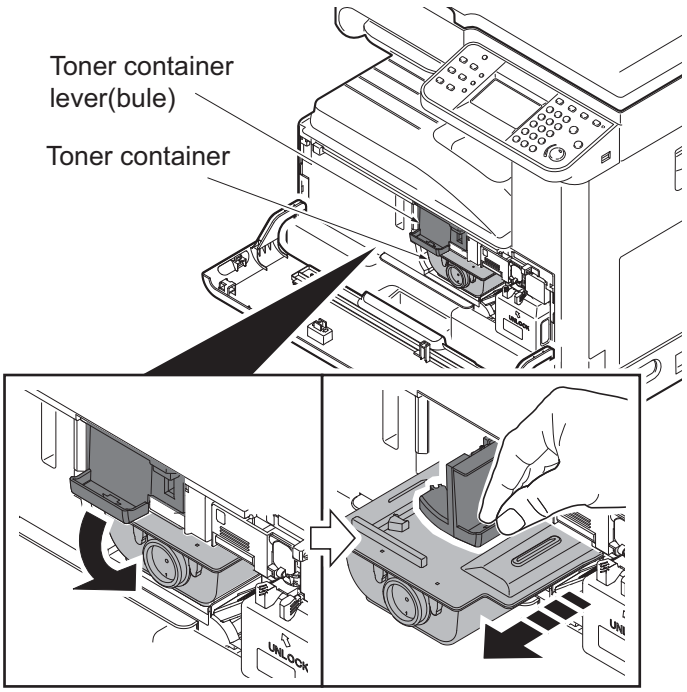

Figure 1-5-27

4. Release the lock lever (yellow).

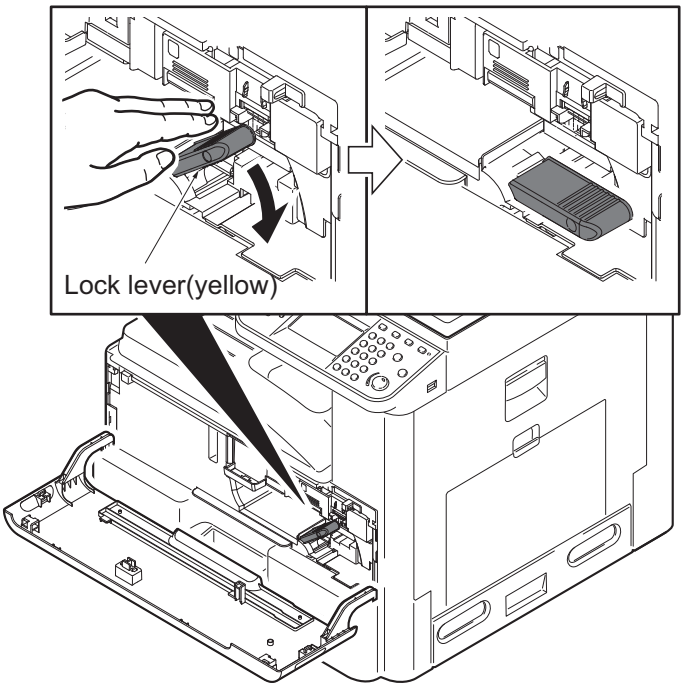

Figure 1-5-28

5. Release the lock lever (yellow) of the developing cover to open.

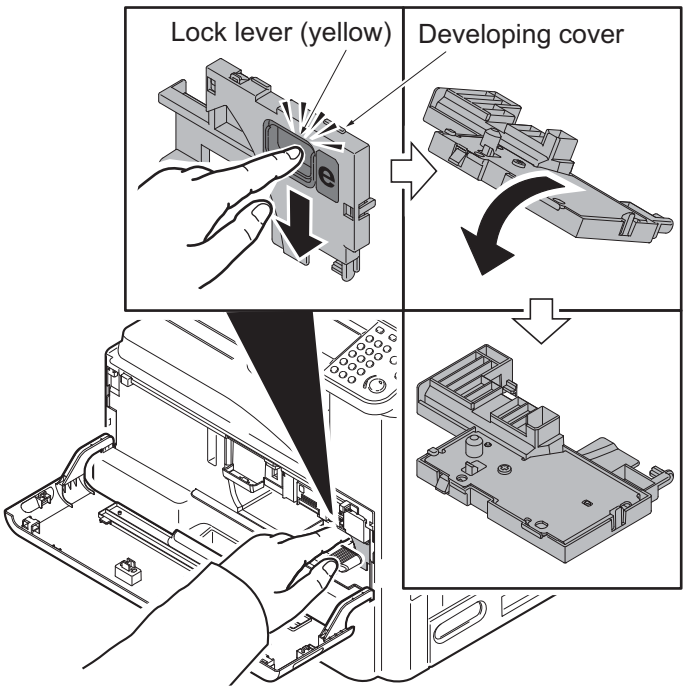

Figure 1-5-29

6. Release the lock lever (yellow) and then remove the developing unit.
7. Check or replace the developing unit and refit all the removed parts.

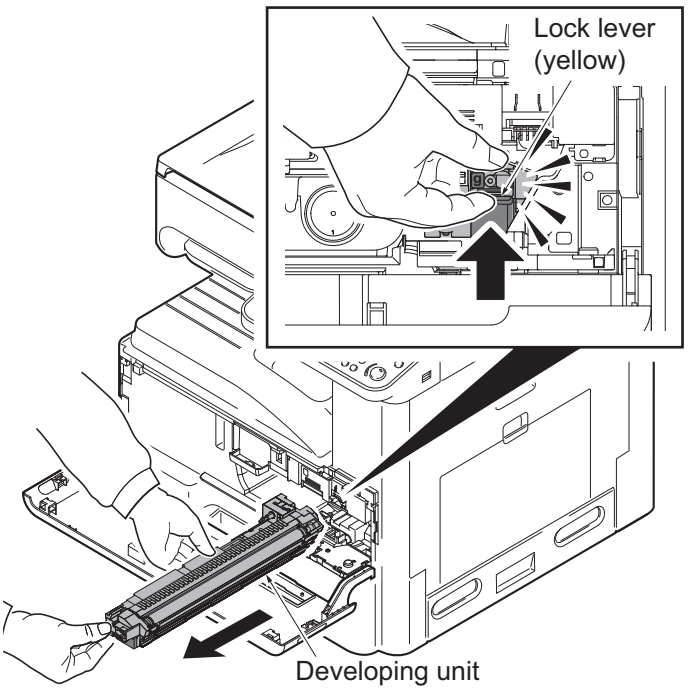

Figure 1-5-30

1-5-5 Drum section

(1) Detaching and refitting the drum unit

Procedure

1. Open the front cover. (See page 1-5-3)
2. Release the waste toner box. (See page 1-5-16)
3. Release the lock lever and then open the developing cover. (See page 1-5-17)
4. Open the right cover 1. (See page1-5-11)
5. Release the lock lever (yellow) and then remove the drum unit.
6. Check or replace the drum unit and refit all the removed parts.

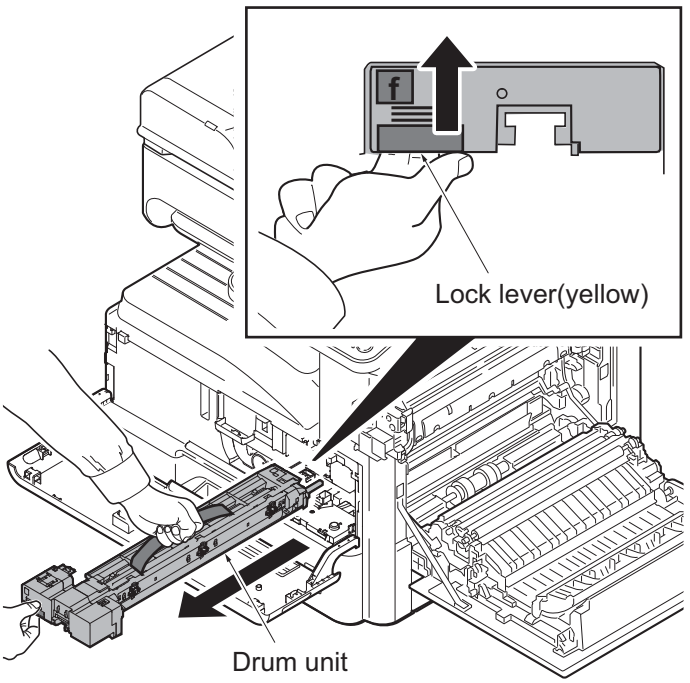

Figure 1-5-31

(2) Detaching and refitting the chager roller unit

Procedure

1. Remove the drum unit. (See page 1-5-19)
2. Release the lock lever and then remove the chager roller unit.
3. Check or replace the chager roller unit and refit all the removed parts.

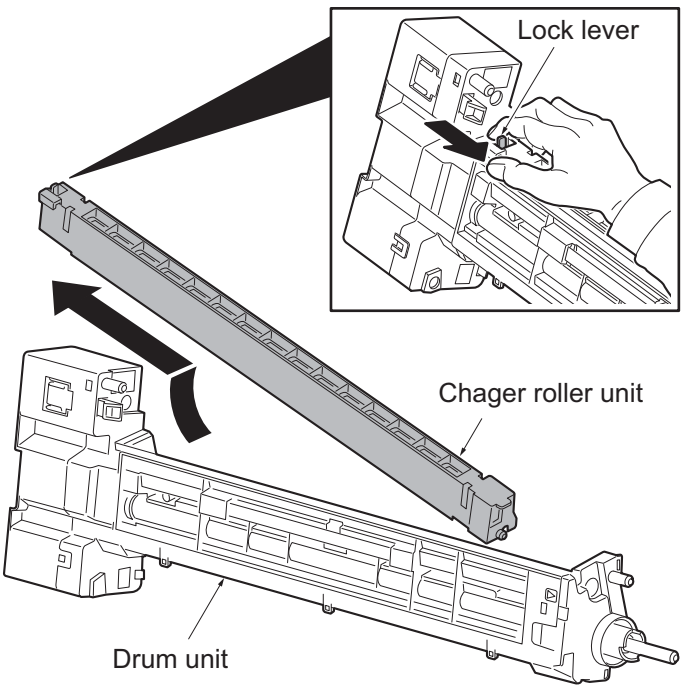

Figure 1-5-32

1-5-6 Transfer/separation section

(1) Detaching and refitting the transfer roller unit

Procedure

1. Open the right cover 1.
   (See page 1-5-11)
2. Release two lock levers (yellow) and then remove the transfer roller unit.
3. Check or replace the transfer roller unit and refit all the removed parts.

   CAUTION: Inserting the transfer roller unit in place until it click in,when refitting the transfer roller unit.

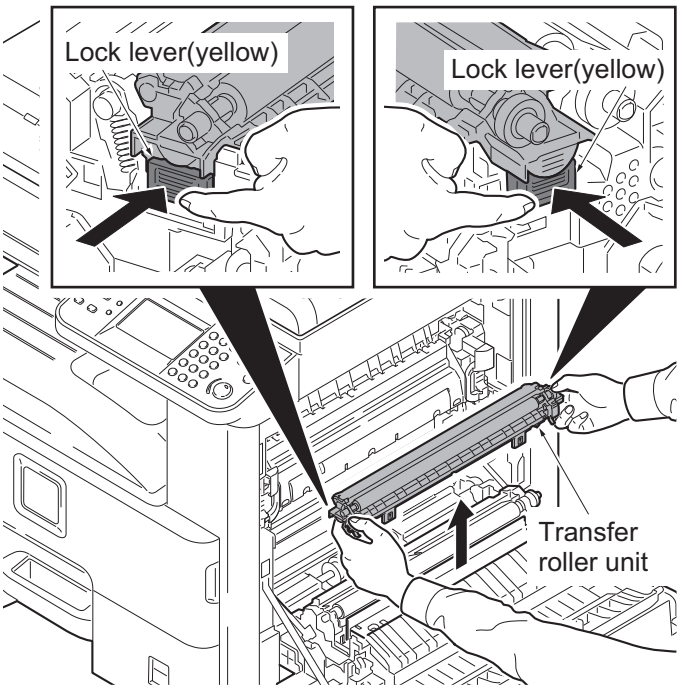

Figure 1-5-33

1-5-7 Fuser section

(1) Detaching and refitting the fuser unit

Procedure

1. Open the right cover 1.
   (See page 1-5-11)
2. Cause two knobs (yellow).
3. Release the lock lever (blue) and then remove the fuser unit.
4. Check or replace the fuser unit and refit all the removed parts.

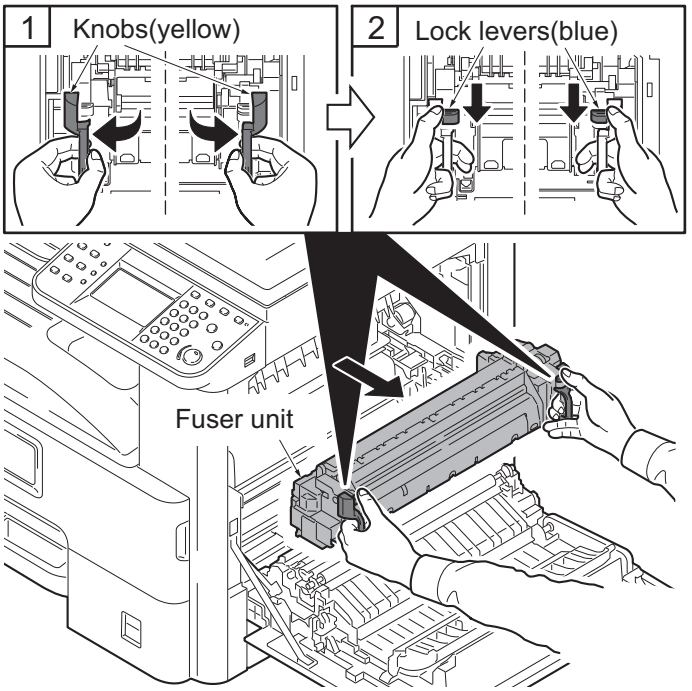

Figure 1-5-34

1-5-8 Drive section

(1) Detaching and refitting the main motor

Procedure

1. Remove the rear cover.
   (See page 1-5-5)
2. Remove the connector from the engine PWB.
3. Remove the wire from the hook.
4. Remove four screws and then remove the main motor.

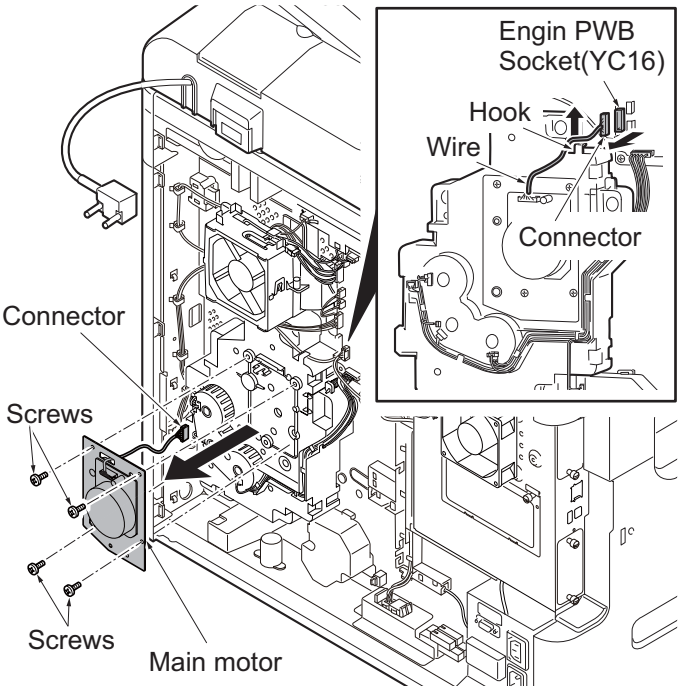

Figure 1-5-35

(2) Detaching and refitting the drive unit

Procedure

1. Remove the rear cover.
   (See page 1-5-5)
2. Remove the connector from the engine PWB.
3. Remove five screws and then remove the drive unit.
4. Check or replace the drive unit and refit all the removed parts.

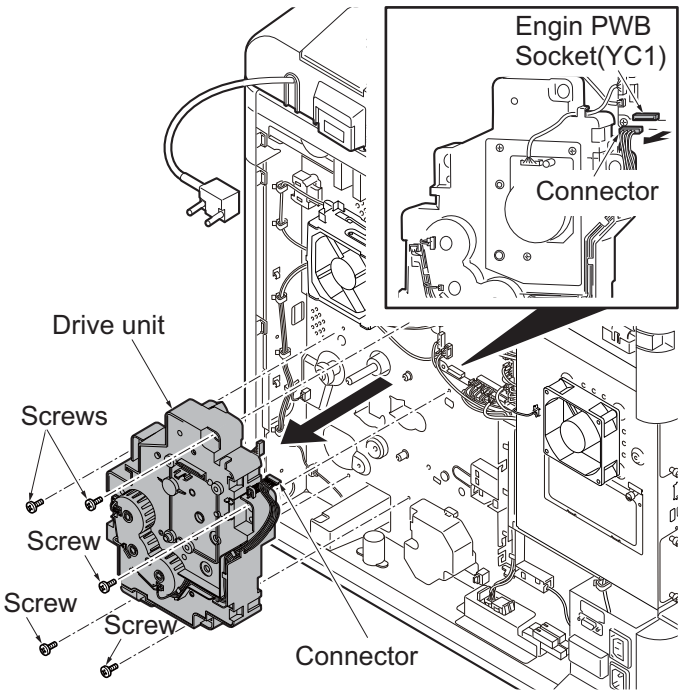

Figure 1-5-36

1-5-9 Optical section

(1) Detaching and refitting the laser scanner unit

Procedure

1. Remove the rear cover and inner tray.(See page 1-5-5,1-5-6)
2. Remove the connector.
3. Remove the screw and then remove the power source fan motor.

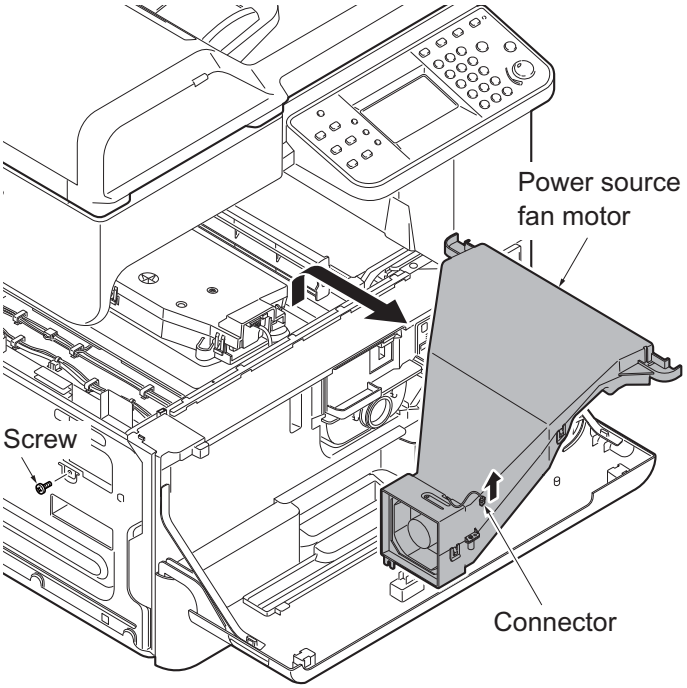

Figure 1-5-37

4. Remove the connector.
5. Remove four screws and then remove the laser scanner unit.
6. Check or replace the laser scanner unit and refit all the removed parts.

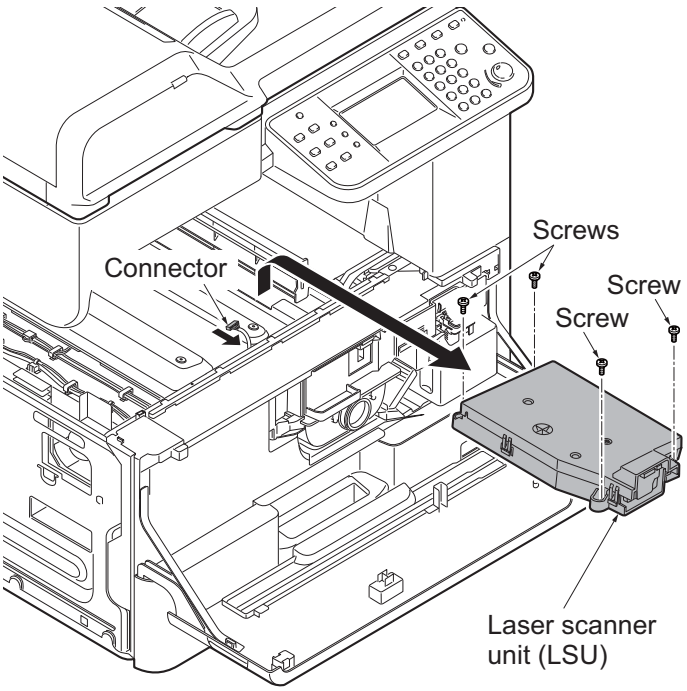

Figure 1-5-38

(2) Detaching and refitting the image scanner unit

Procedure

1. Remove the DP or original cover. (See page 1-5-28)
2. Remove two screws and then remove the scanner right cover.

   CAUTION: To reinstall the rscanner right cover,position it close to the platen.

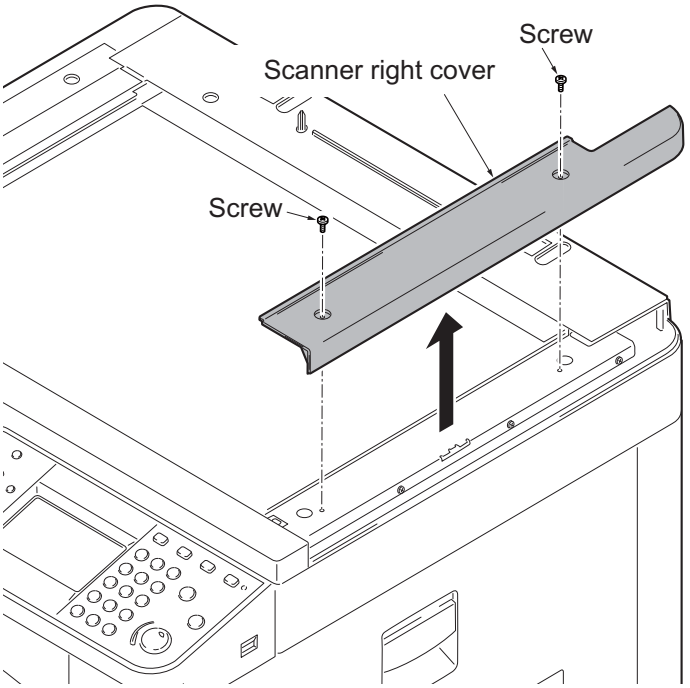

Figure 1-5-39

3. Remove the platen.

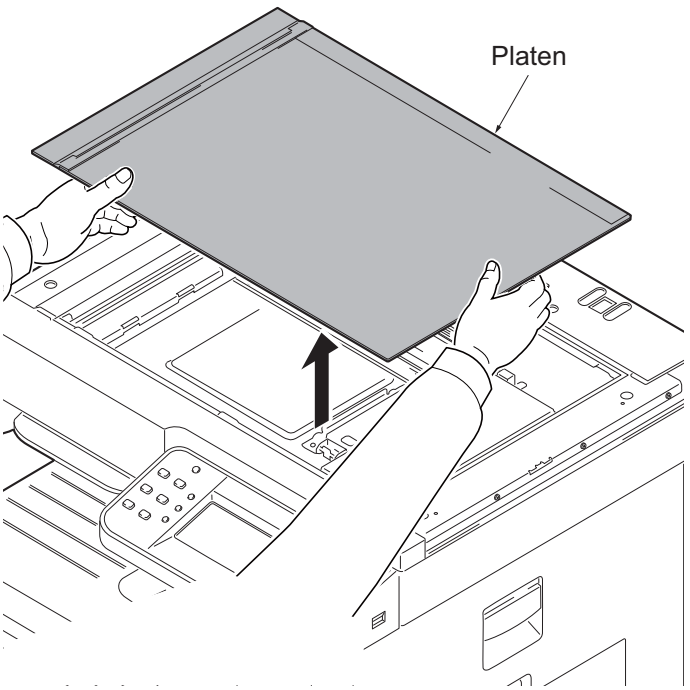

Figure 1-5-40

4. Remove four screws and then remove the scanner cover.

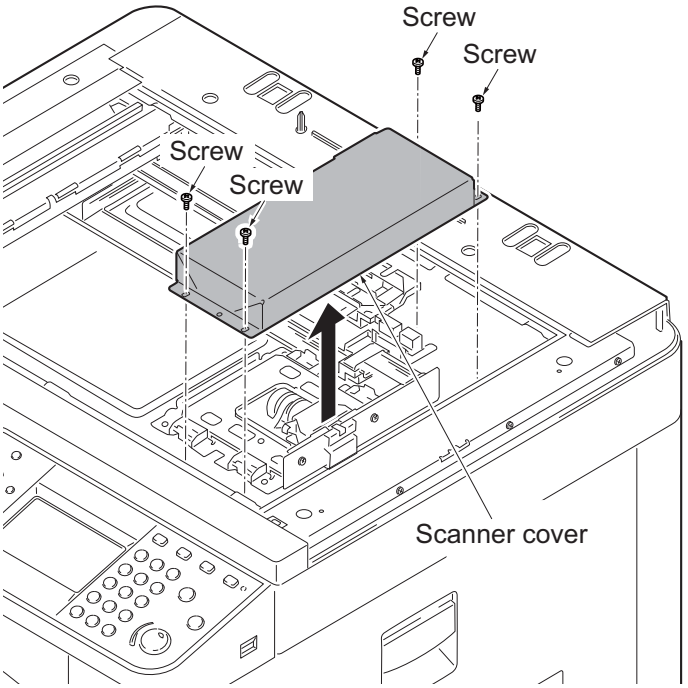

Figure 1-5-41

5. Remove the FFC from the connector.
6. Remove four screws and then remove the image scanner unit.
7. Check or replace the image scanner unit and refit all the removed parts.

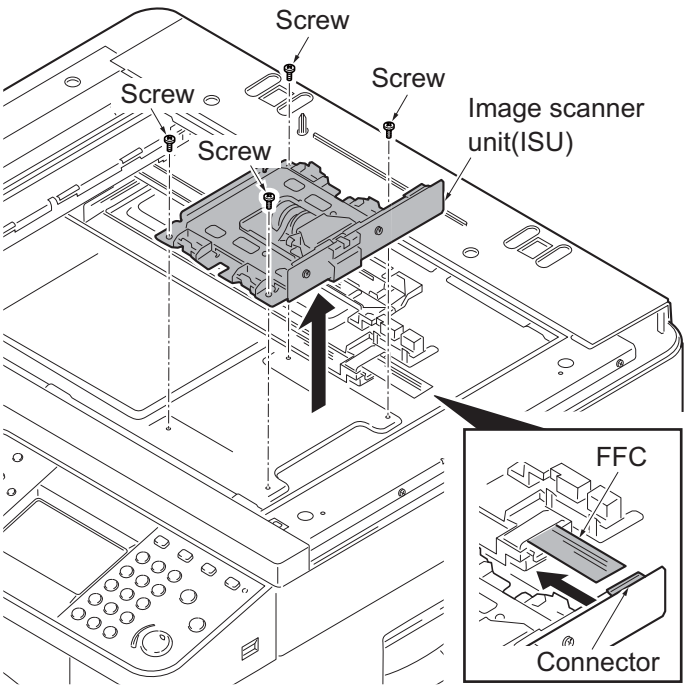

Figure 1-5-42

(3) Detaching and refitting the LED unit

Procedure

1. Remove the DP or original cover. (See page 1-5-28)
2. Remove the sanner right cover and platen.(See page 1-5-24)
3. Remove the ISU front cover.

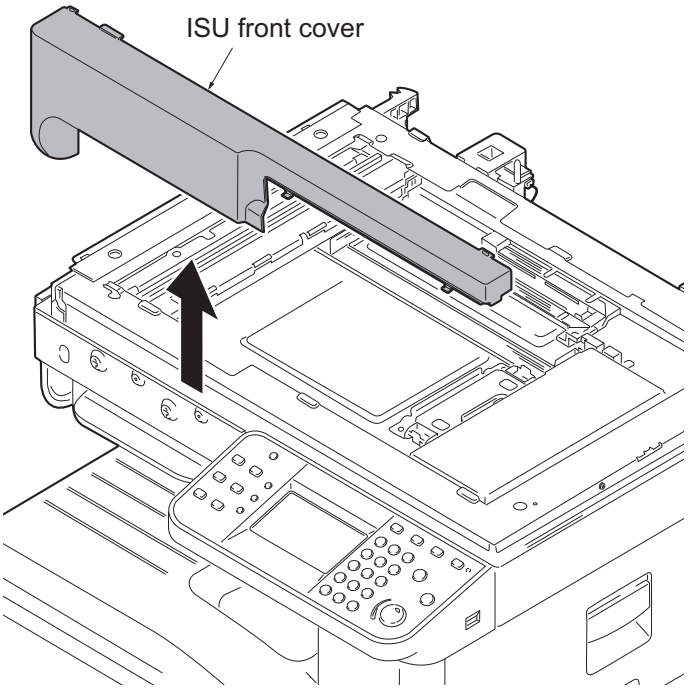

Figure 1-5-43

4. Remove two screws and then remove the ISU rear cover.

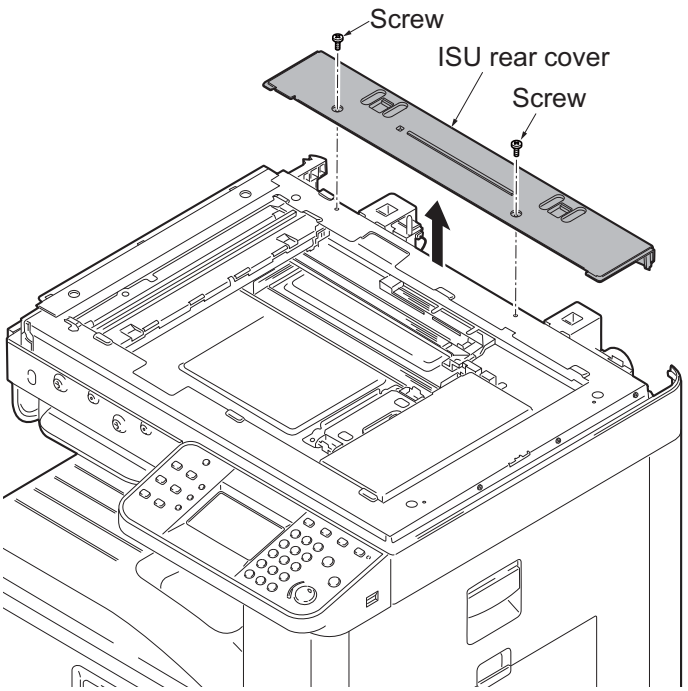

Figure 1-5-44

5. Move the exposure unit to the cutting lack part.
6. Release the hook and then remove the FFC cover.

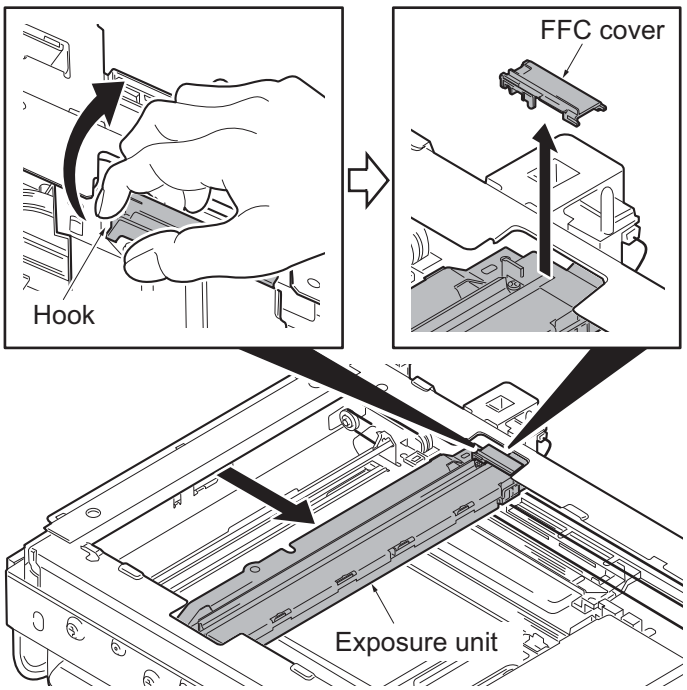

Figure 1-5-45

7. Remove the FFC from the connector.
8. Remove two screws and then remove the LED unit.
9. Check or replace the LED unit and refit all the removed parts.

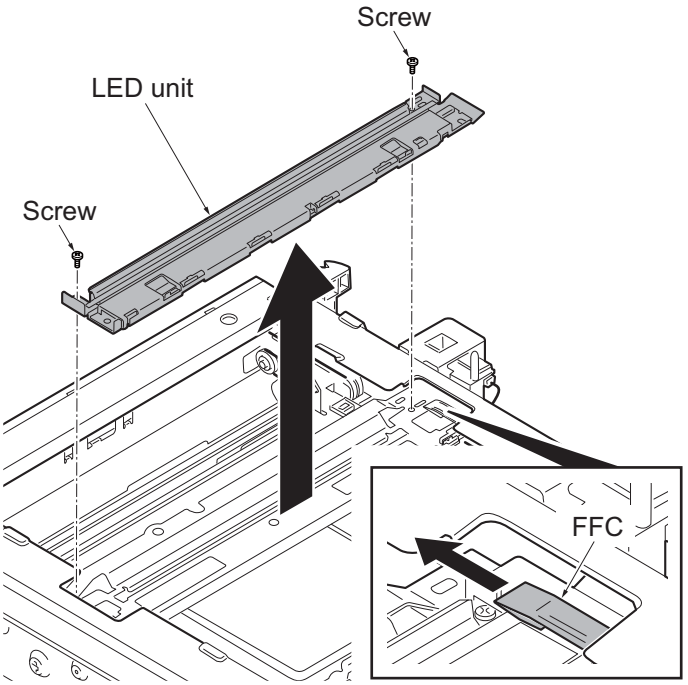

Figure 1-5-46

1-5-10 Document processer

(1) Detaching and refitting the document processer

Procedure

1. Remove the restriction parts.
2. Open the document processer on vertically.

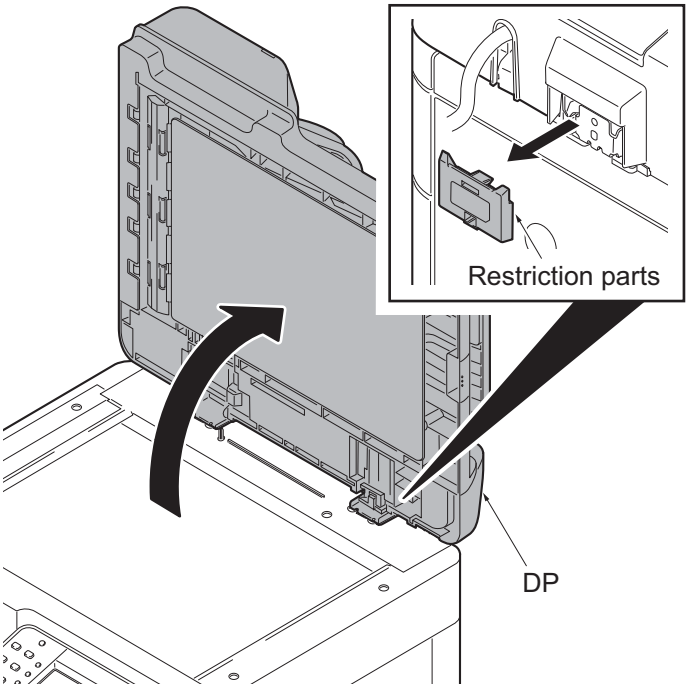

Figure 1-5-47

3. Remove two screws and then remove the DP interface connector.
4. Pull the document processer upwards out.

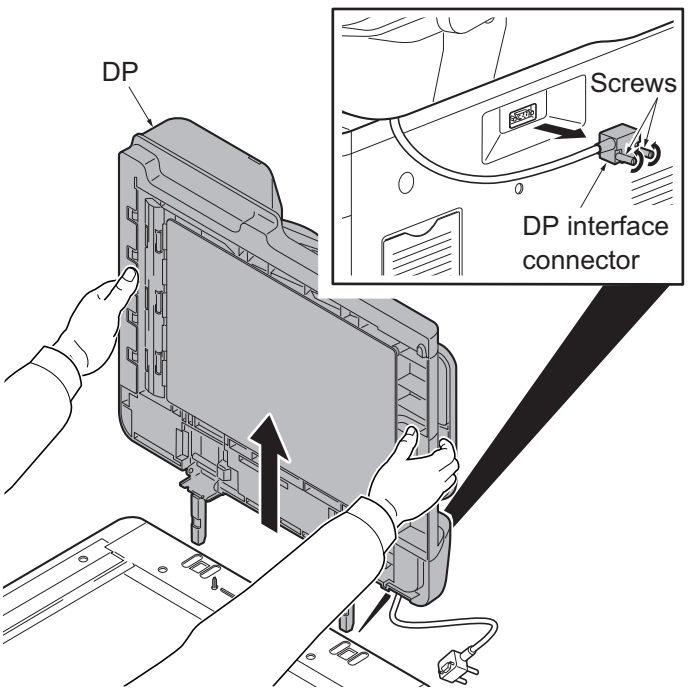

Figure 1-5-48

(2) Detaching and refitting the DP paper feed roller and DP separation pulley

Procedure

1. Open the DP top cover.

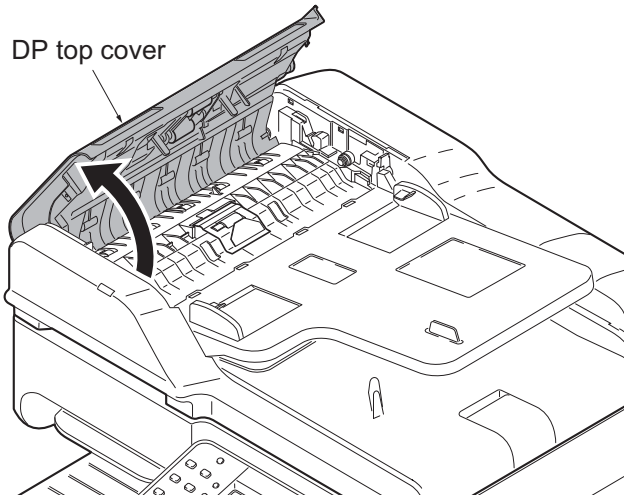

Figure 1-5-49

2. Pull the DP paper feed lever (yellow) down and then open it.
3. Knock the DP paper feed roller down forward.

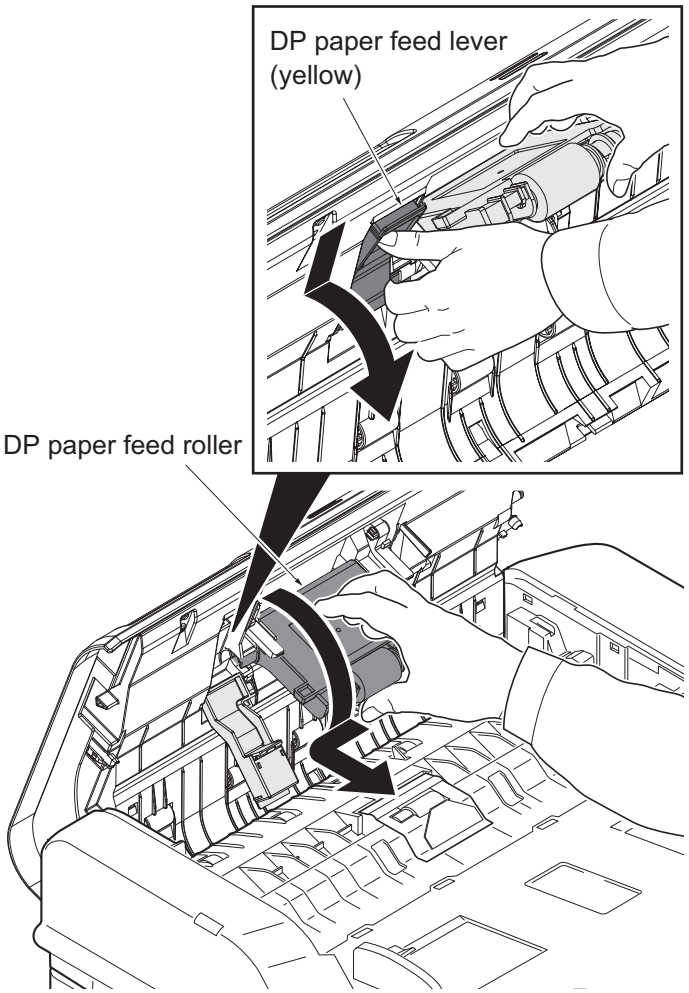

Figure 1-5-50

4. Release the hook and then remove DP separation pulley cover.

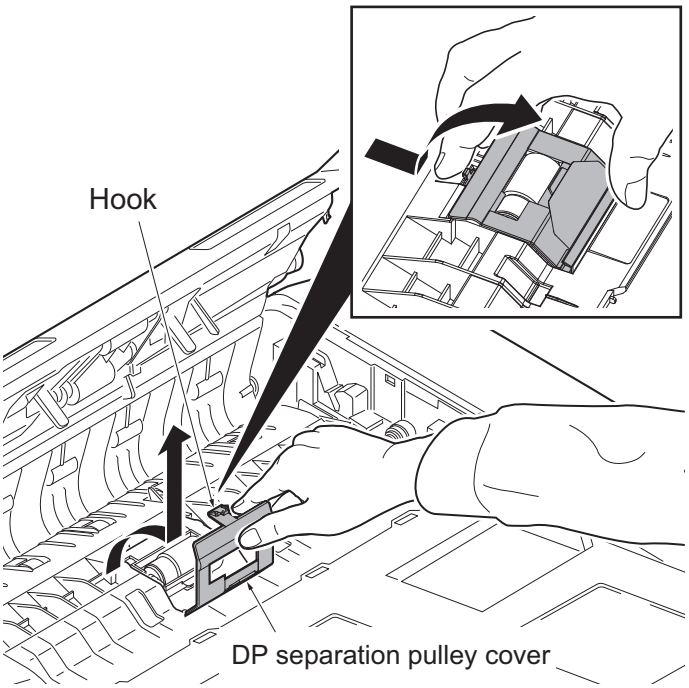

Figure 1-5-51

5. Raise the DP separation pulley and remove it by pulling upward.
6. Check or replace the DP paper feed roller and DP separation pulley and refit all the removed parts.

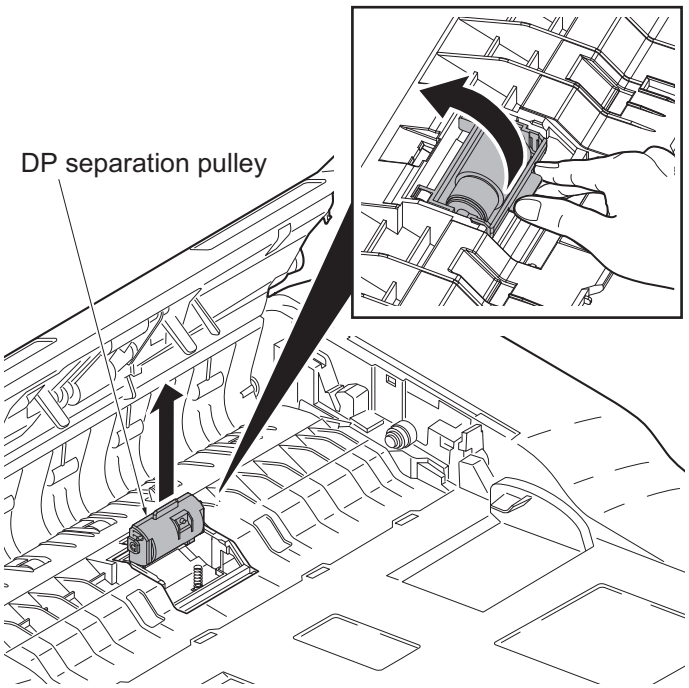

Figure 1-5-52

(3) Detaching and refitting the DP main PWB

Procedure

1. Open the document processer.
2. Release three hooks of the DP rear cover.

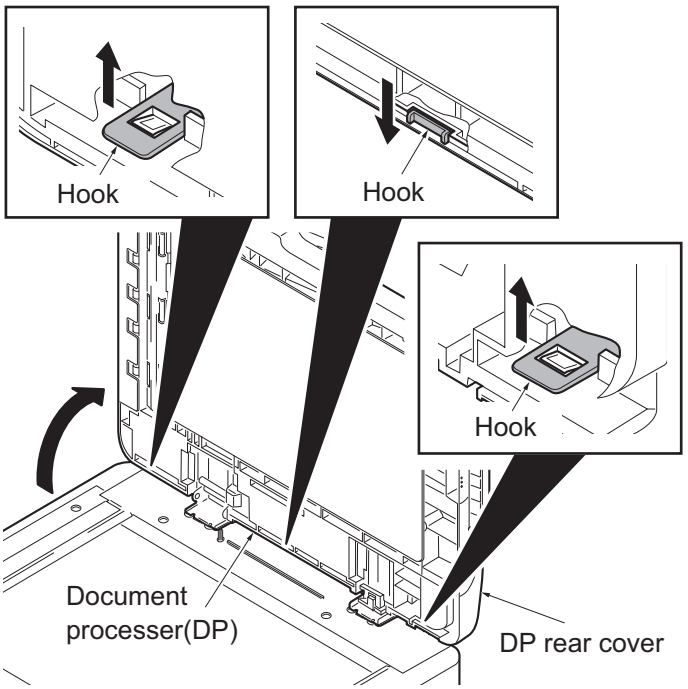

Figure 1-5-53

3. Release two hooks of the DP rear cover and then remove it.

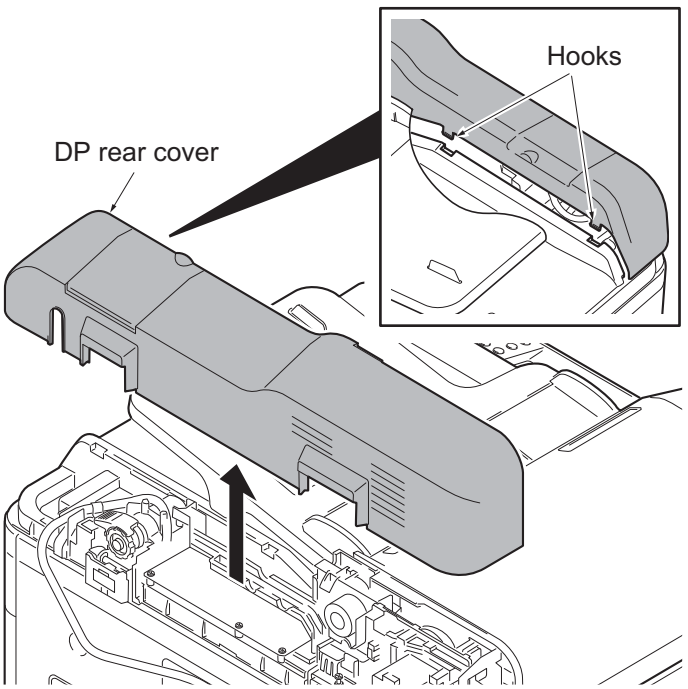

Figure 1-5-54

4. Remove all connectors from DP main PWB.
5. Remove five clamps and then remove the waires from holder.
6. Remove two screws and then remove the holder.

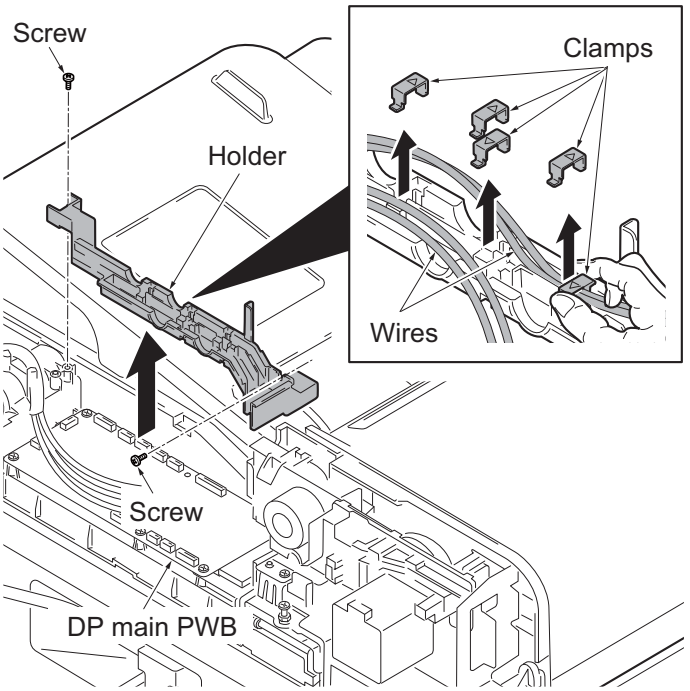

Figure 1-5-55

7. Remove six screws and then remove the DP main PWB.
8. Check or replace the DP main PWB and refit all the removed parts.

   CAUTION: When replacing the DP main PWB, remove the EEPROM from the DP main PWB that has been removed and then reattach it to the new DP main PWB.

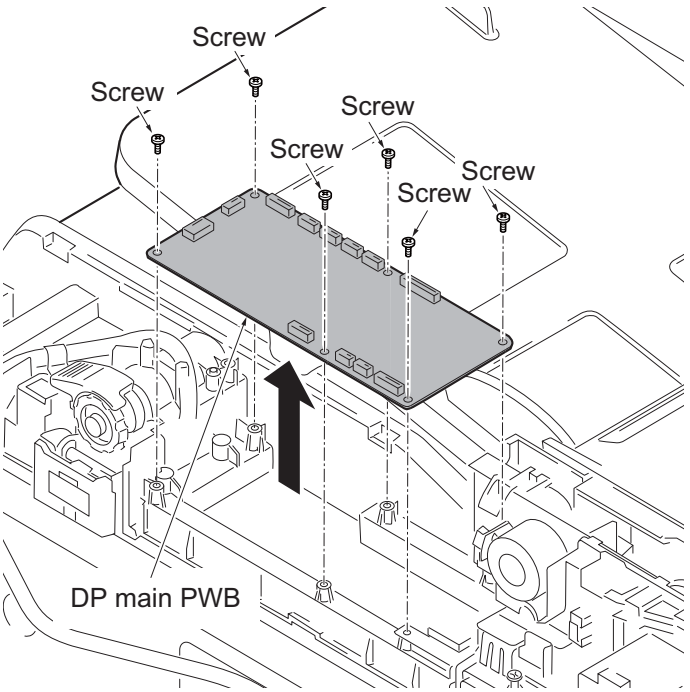

Figure 1-5-56

1-5-11 PWBs

(1) Detaching and refitting the main PWB

Procedure

1. Remove the rear cover.
   (See page 1-5-5)
2. Remove the left lower cover.
   (See page 1-5-6)
3. Remove the connector.
4. Remove the wire from the clamp.
5. Remove eleven screws and then remove the controller box.

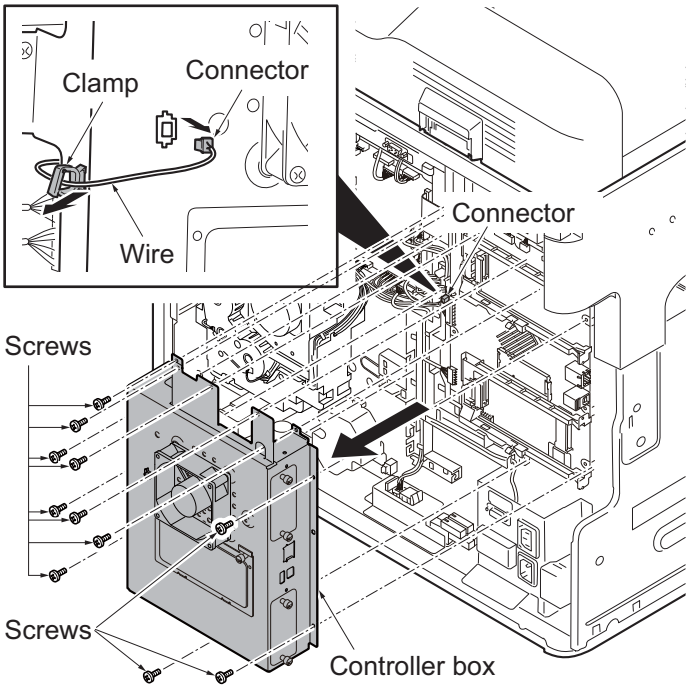

Figure 1-5-57

6. Remove all connectors for the main PWB.
7. Remove seven screws and then remove the main PWB.
8. Check or replace the main PWB and refit all the removed parts.

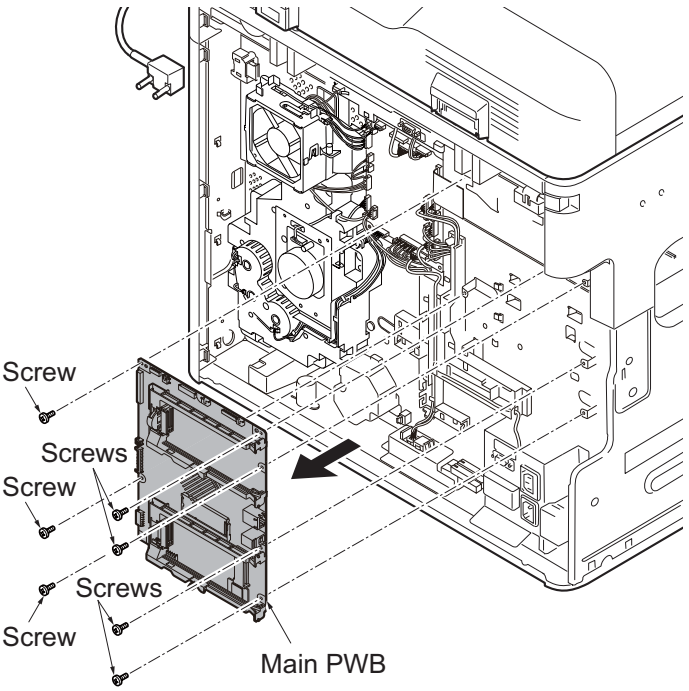

Figure 1-5-58

(2) Detaching and refitting the engine PWB

Procedure

1. Remove the rear cover.
   (See page 1-5-5)
2. Remove all conectors from the engine PWB.
3. Remove four screws and then remove the engin PWB.
4. Check or replace the engine PWB and refit all the removed parts.

   CAUTION: When replacing the engine PWB, remove the EEPROM (U12) from the engine PWB that has been removed and then reattach it to the new engine PWB.

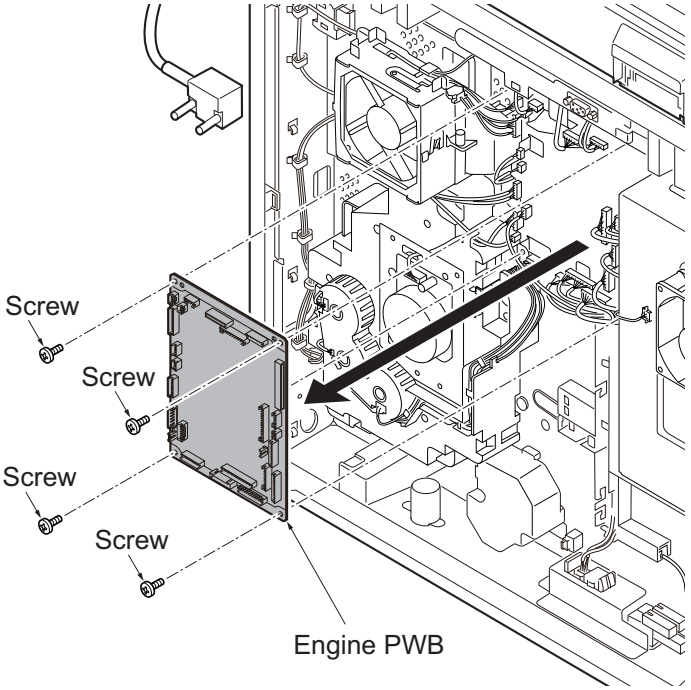

Figure 1-5-59

(3) Detaching and refitting the power source PWB

Procedure

1. Remove the rear cover and inner tray.(See page 1-5-5,1-5-6)
2. Remove the power source fan motor.(See page 1-5-23)
3. Remove all connecters from the power source PWB.
4. Remove four screws and then remove the power source PWB.
5. Check or replace the power source PWB and refit all the removed parts.

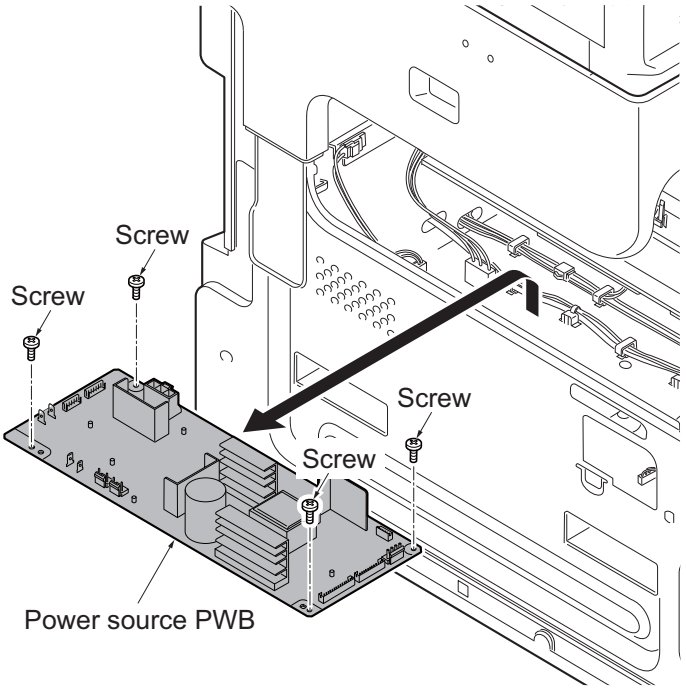

Figure 1-5-60

(4) Detaching and refitting the operation panel PWB main

Procedure

1. Remove the language sheets.
   (See page 1-5-37)
2. Remove two screws.

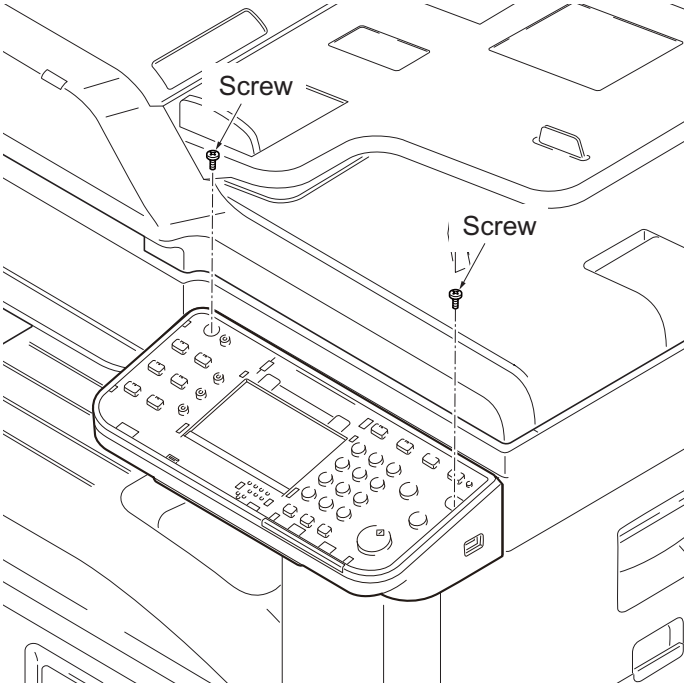

Figure 1-5-61

3. Remove three connectors from the operation panel PWB main.
4. Remove the operation panel upper unit.

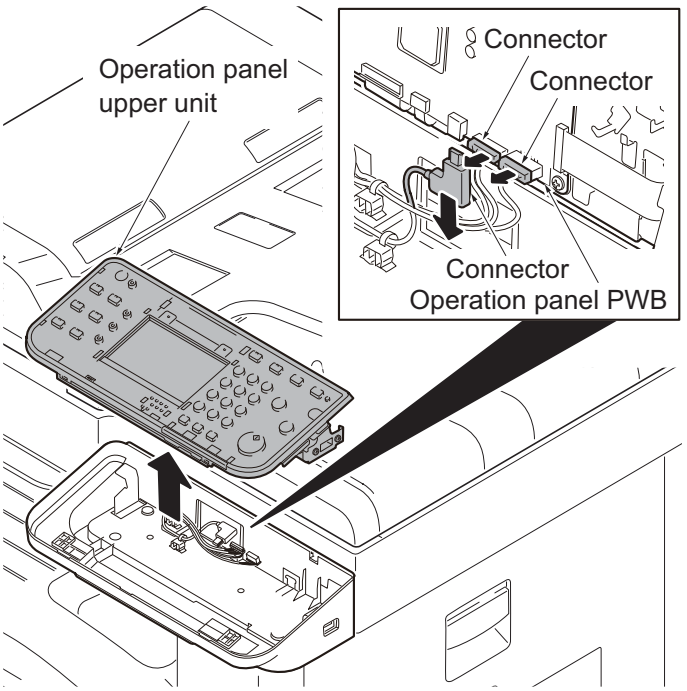

Figure 1-5-62

5. Remove four FFCs from the operatioon panel PWB main.
6. Remove four screws and then remove the operation panel PWB main.
7. Check or replace the operation panel PWB main and refit all the removed parts.

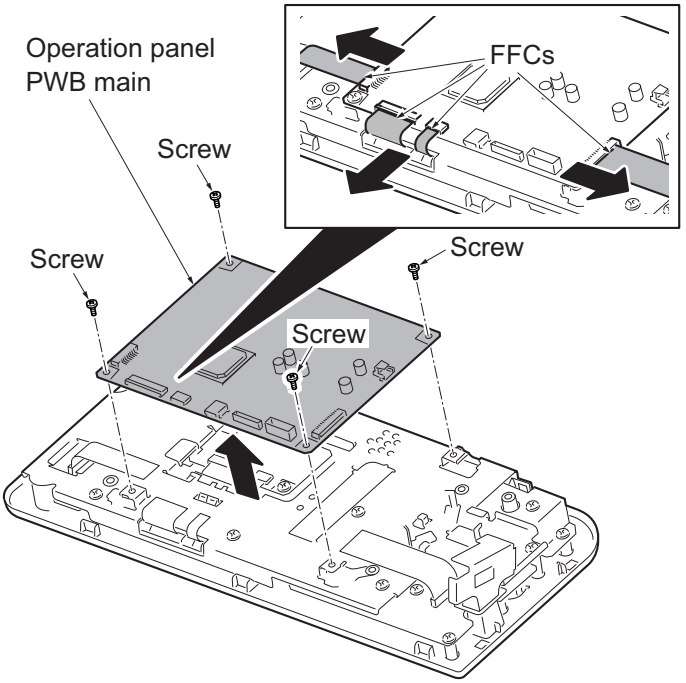

Figure 1-5-63

(5) Detaching and refitting the high voltage PWB

Procedure

1. Remove the rear cover, inner tray and eject rear cover.
   (See page 1-5-5,1-5-6 and 1-5-8)
2. Remove the FFC from the high voltage PWB.
3. Remove four screws and then remove the high voltage PWB.
4. Check or replace the high voltage PWB and refit all the removed parts.

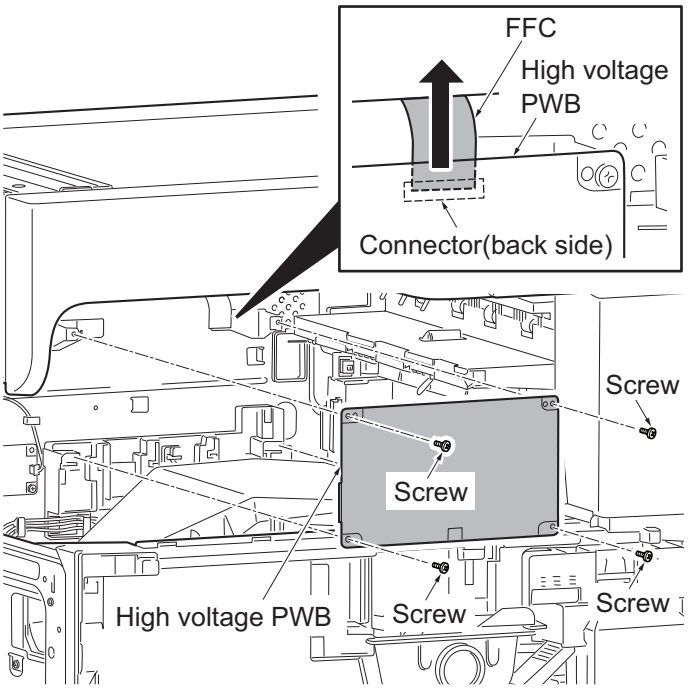

Figure 1-5-64

1-5-12 Others

(1) Detaching and refitting the language sheet

Procedure

1. Remove the upper cover by using a pen.
2. Remove the LCD cover.
3. Remove two operation panel covers
4. Remove two language sheets.
5. Check or replace the language sheet and refit all the removed parts.

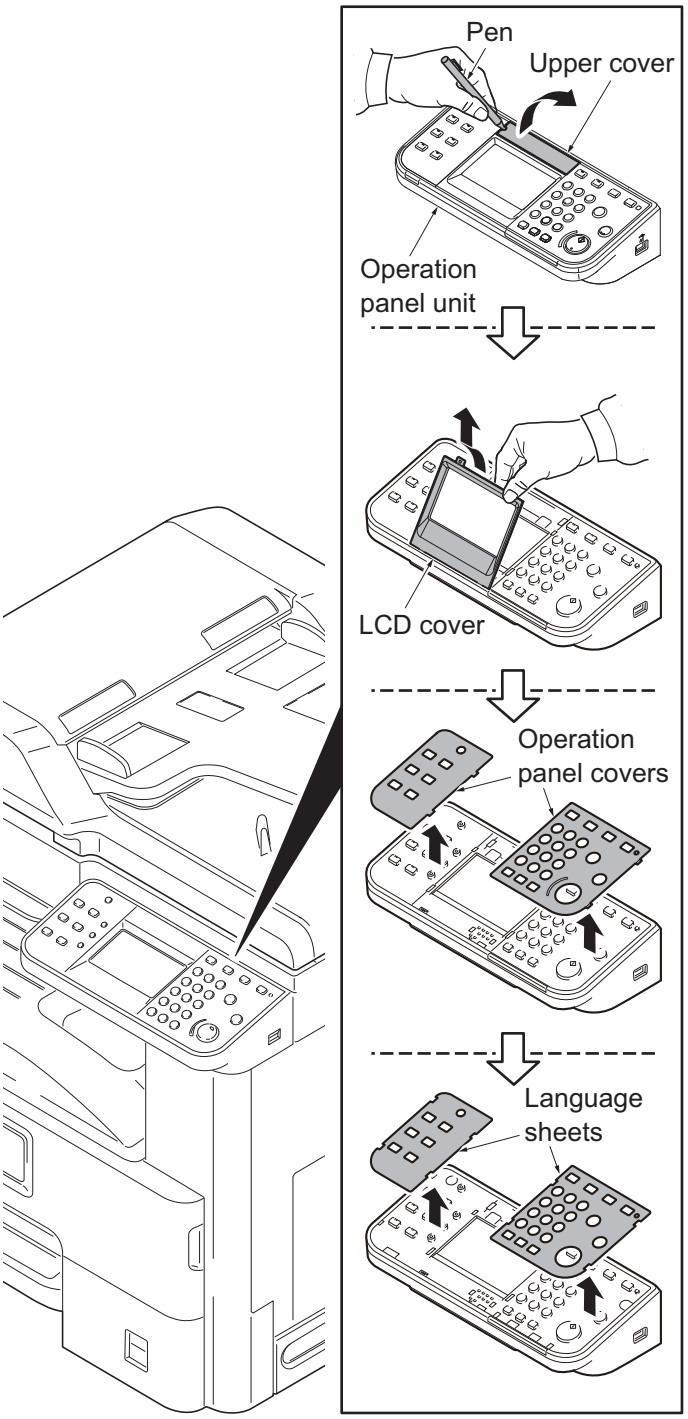

Figure 1-5-65

(2) Detaching and refitting the conveying unit

Procedure

1. Remove the MP tray.(See page 1-5-15)
2. Remove the right cover 1.
   (See page 1-5-11)

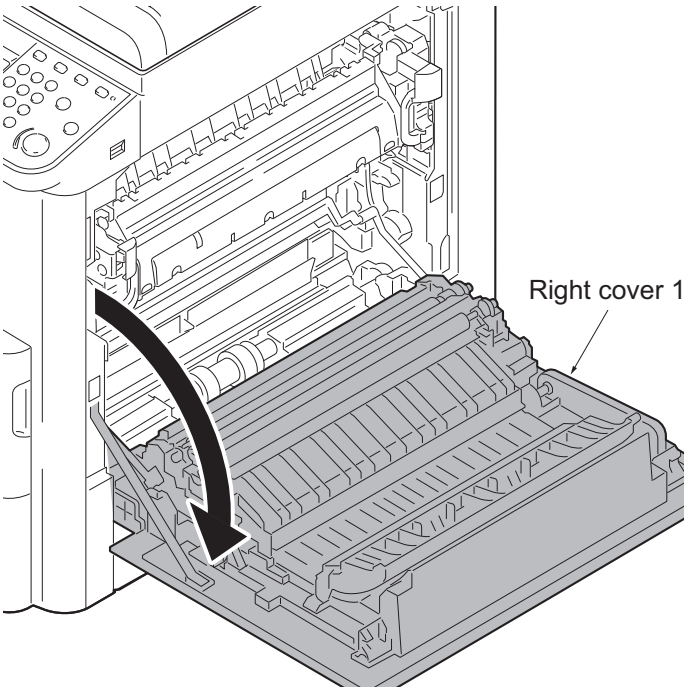

Figure 1-5-66

3. Remove two screws and then remove two straps.

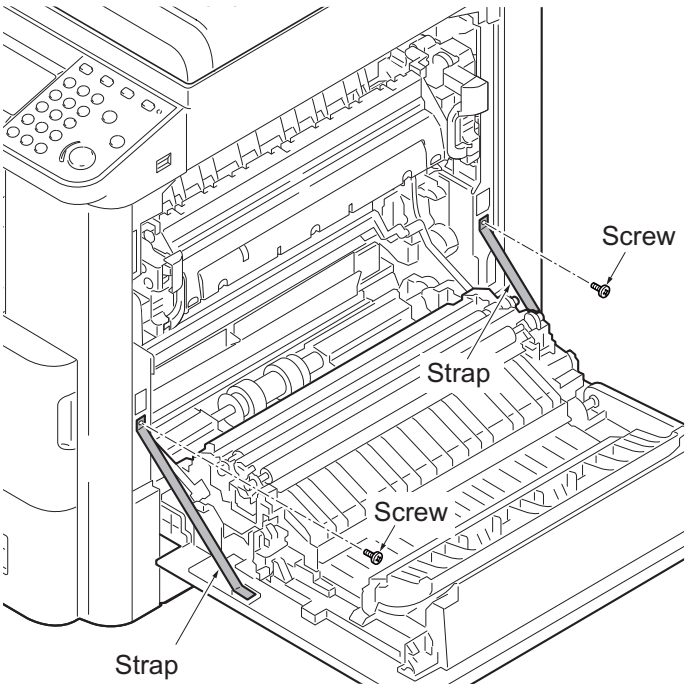

Figure 1-5-67

4. Remove the stop ring from the rear side of conveying unit and then remove the link F.
5. To similar,remove the stop ring from the rear side of conveying unit and then remove the link R.

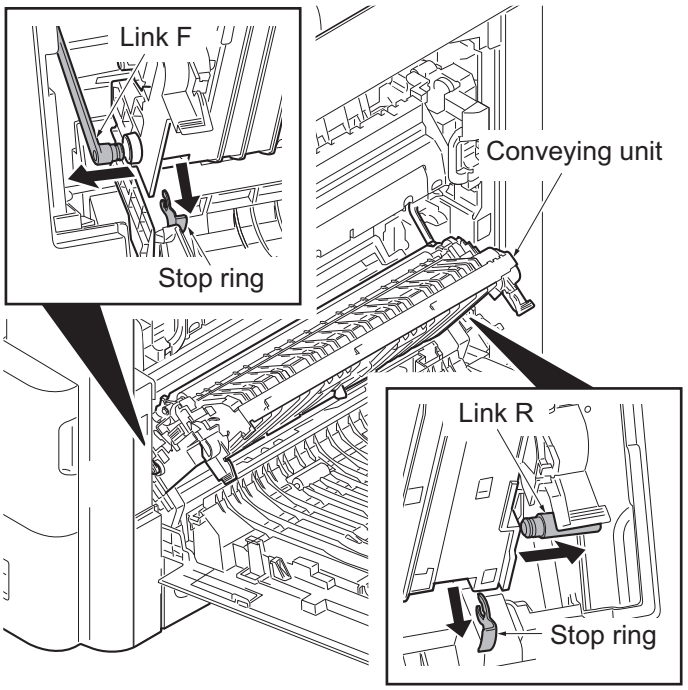

Figure 1-5-68

6. Rotate the wire cover.
7. Remove the connector.
8. Rotate the fulcrum axis and slide it forward.
9. Pull the right cover 1 backward and then remove it.

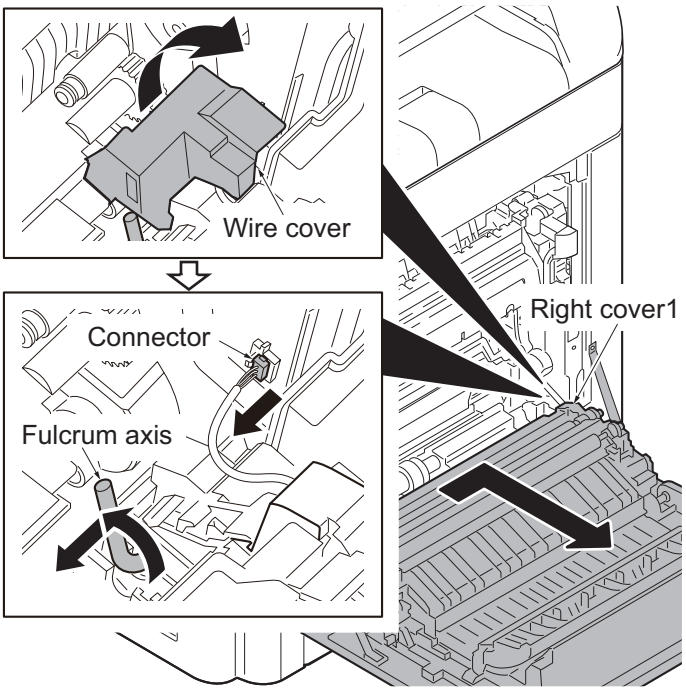

Figure 1-5-69

(3) Detaching and refitting the eject fan motor

Procedure

1. Remove the rear cover.
   (See page 1-5-5)
2. Remove the connector and then remove two wires from three hooks respectively.
3. Remove two screws and then remove the eject fan motor.

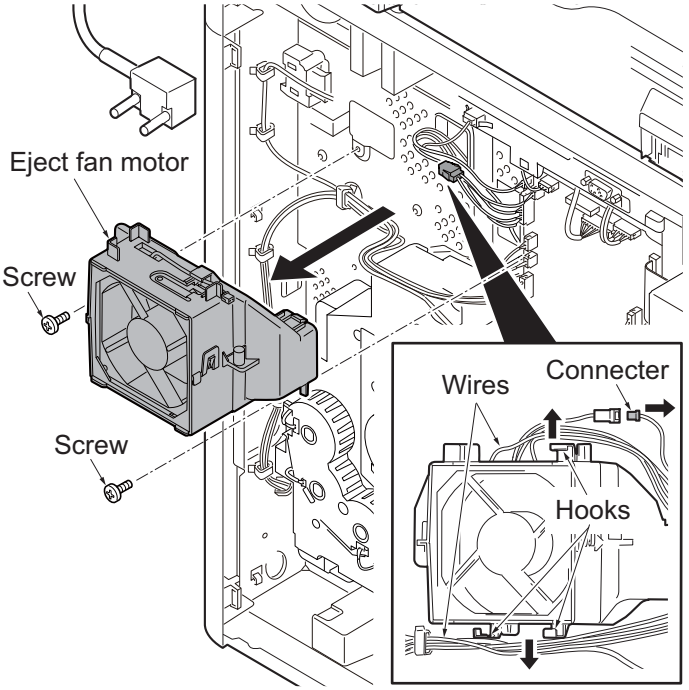

Figure 1-5-70

(4) Direction of installing the principal fan motors

When detaching or refitting the fan moter,be careful of the airflow direction (intake or exhaust).

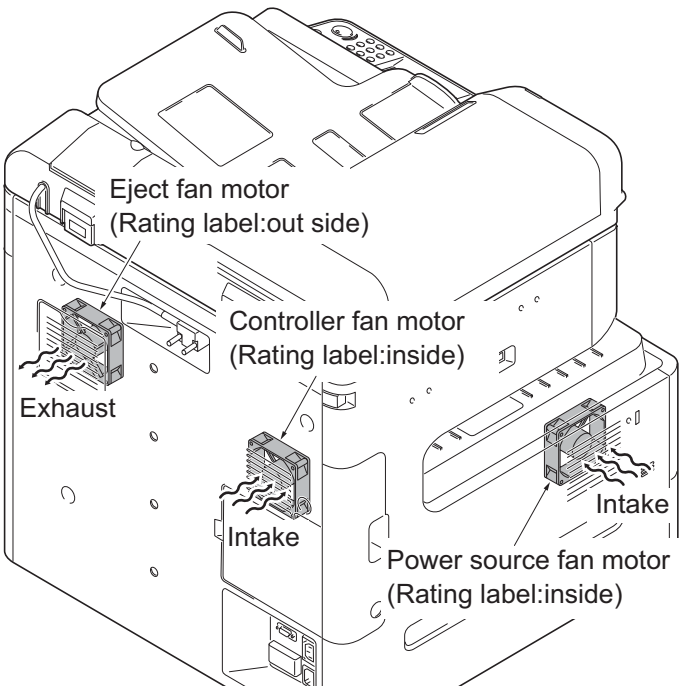

Figure 1-5-71

1-6-1 Upgrading the firmware

Follow the procedure to upgrade the firmware below.

* Main PWB (CTRL)
* DP main PWB (DP)
* PF main PWB (PF)
* DF main PWB (DF)
* Bridge PWB (AK)
* Engine IO PWB (IO)
* Engine PWB (ENGN)
* FAX PWB (FAX)
* Language data (OPT)
* Dictionary data (DIC)
* Operation panel PWB (PANL)

Preparation

Extract the file that has the download firmware and put them in the USB Memory.

NOTE: To improve Firmware Upgrade speed, a separate SKIP file can be added to the USB Memory Stick with the Firmware Upgrade package. The Skip file will allow ONLY the Firmware that has been Upgraded to a New Version to load, skipping duplicate Firmware Levels.

Procedure

1. Turn ON the main power switch and confirm if the screen shows “Ready to print” then, turn OFF the main power switch.
2. Insert USB memory that has the firmware in the USB memory slot.
3. Turn ON the main power switch.
4. About 50 seconds later, “Farmware Update” will be displayed (this shows to start the download).
5. Display the software that now upgrading.

   CTRL → DP → PF → DF → AK → IO → ENGN → FAX → OPT → DIC → PANL

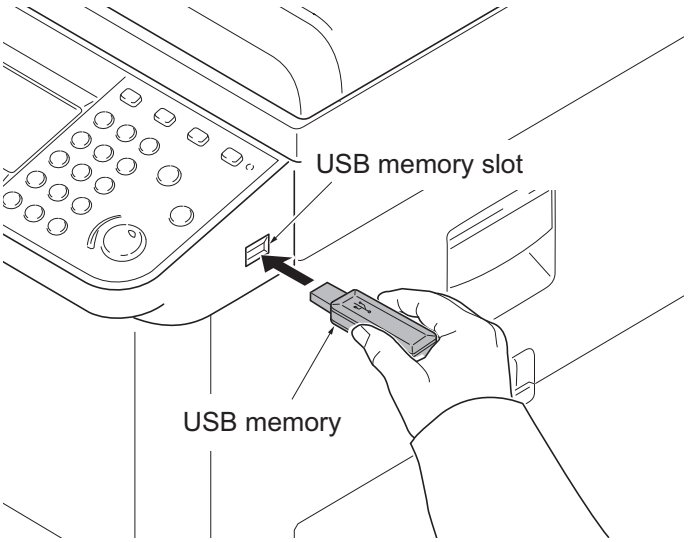

Figure 1-6-1

SAMPLE:

```
=================
  Firmware Update      The first line:     Display shown while updating it
      CTRL             The second line:    Display that shows update object
      xxx%             The third line:     The progress of the update is displayed with %.
=================
```

6. Display the completion of the upgrade.
7. ROM version is confirmed by the content of the display.
8. Turn OFF the main power switch and remove the USB memory.

1-6-2 Remarks on engine PWB replacement

When replacing the engine PWB, remove the EEPROM (U12) from the engine PWB that has been removed and then reattach it to the new engine PWB.

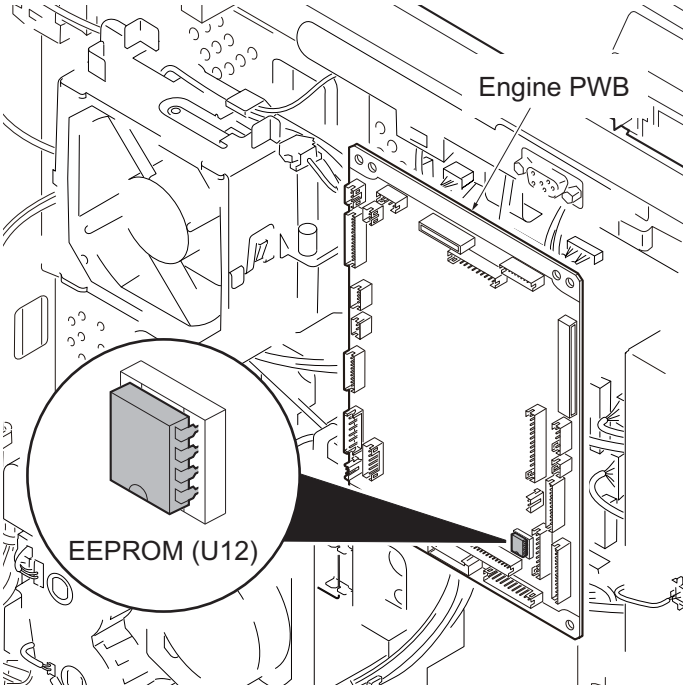

Figure 1-6-2

2-1-1 Paper feed/conveying section

Paper feed/conveying section consists of the paper feed unit that feeds paper from the cassette and the MP tray paper feed unit that feeds paper from the MP tray, and the paper conveying section that conveys the fed paper to the transfer/separation section.

(1) Cassette paper feed section

The cassette can contain 500 sheets. The sheet from the cassette is pulled out by rotation of the pickup roller and sent to the paper conveying section by rotation of the paper feed roller. Also the retard roller prevents multiple feeding of paper.

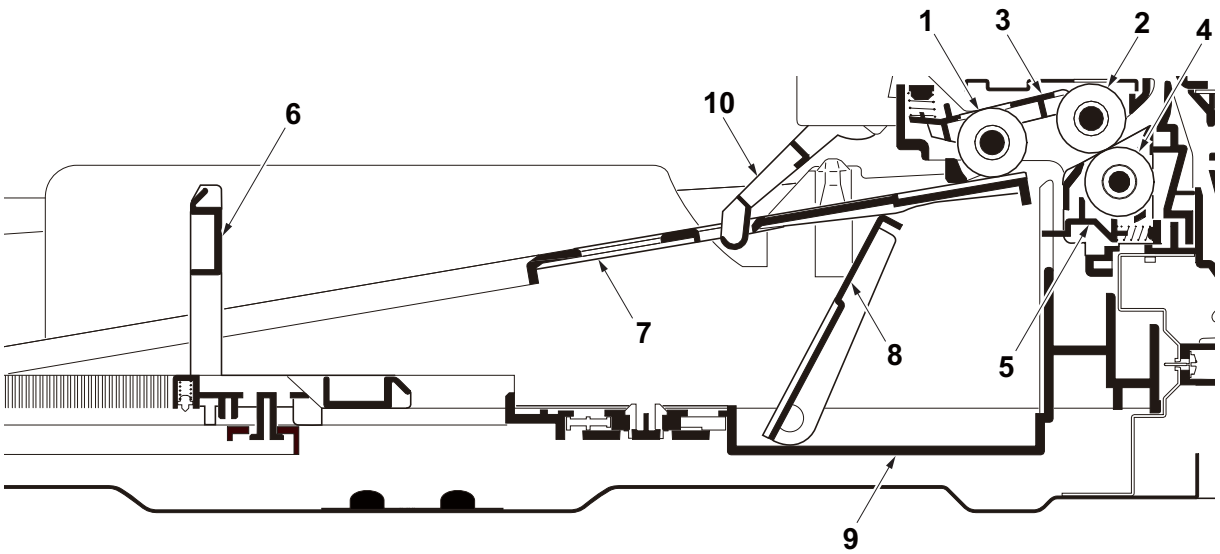

Figure 2-1-1 Cassette paper feed section

1. Pickup roller
2. Paper feed roller
3. Feed holder
4. Retard roller
5. Retard holder
6. Paper length guide
7. Bottom plate
8. Lift work plate
9. Cassette base
10. Actuator (paper sensor)

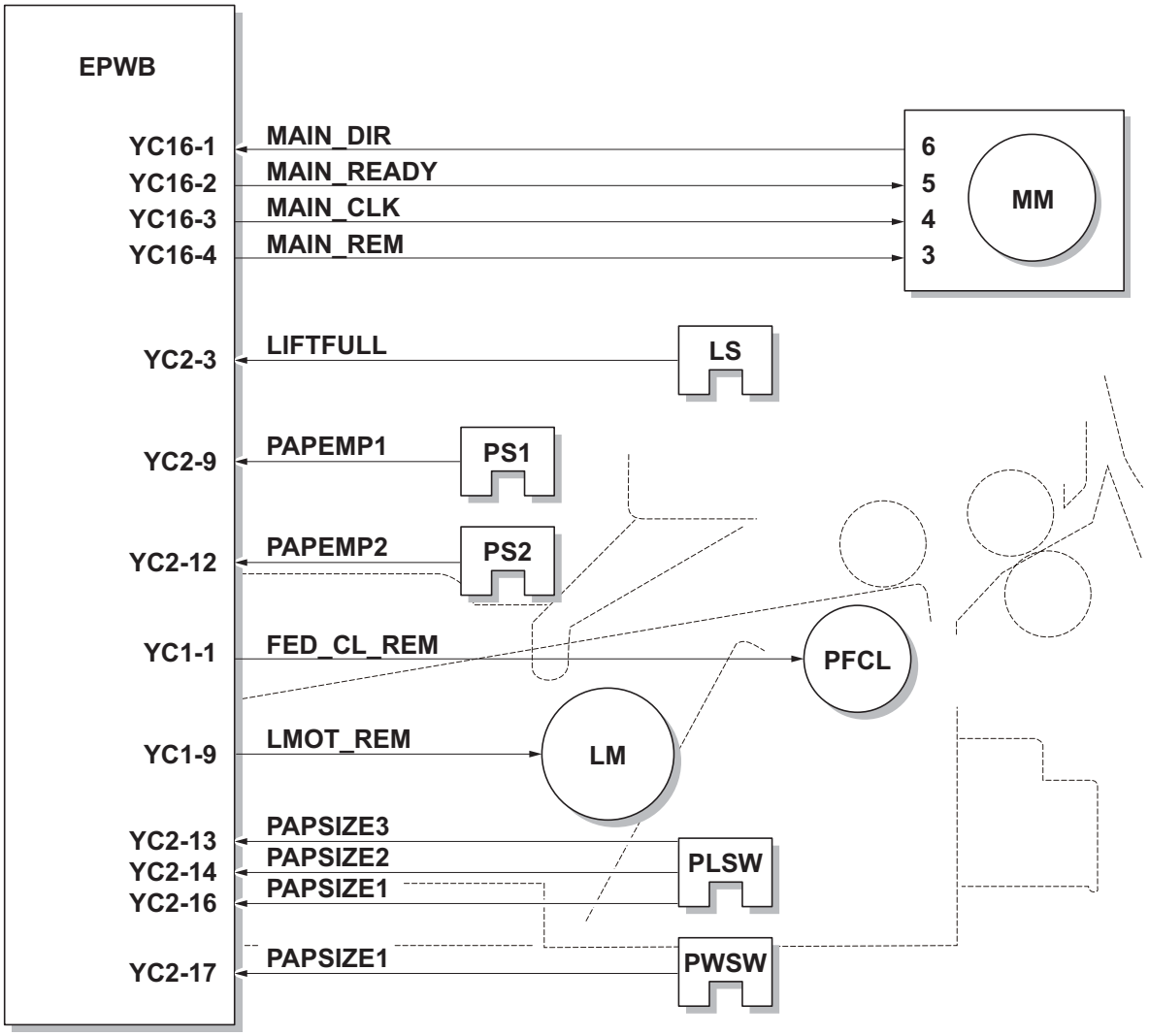

Figure 2-1-2 Cassette paper feed section block diagram

(2) MP tray paper feed section

The MP tray can contain 100 sheets. Feeding from the MP tray is performed by the rotation of the MP paper feed roller. Also, function of the MP separation pad prevents paper from multiple feeding.

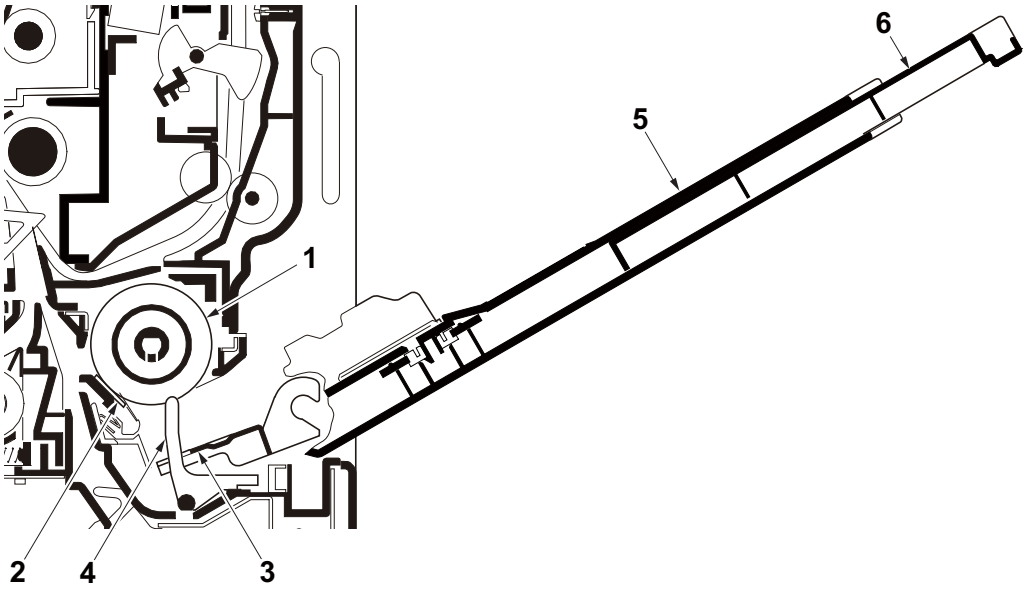

Figure 2-1-3 MP tray paper feed section

1. MP paper feed roller
2. MP separation pad
3. MP bottom plate
4. Actuator(MP paper feed sensor)
5. MP (multi purpose)tray
6. MP tray extension

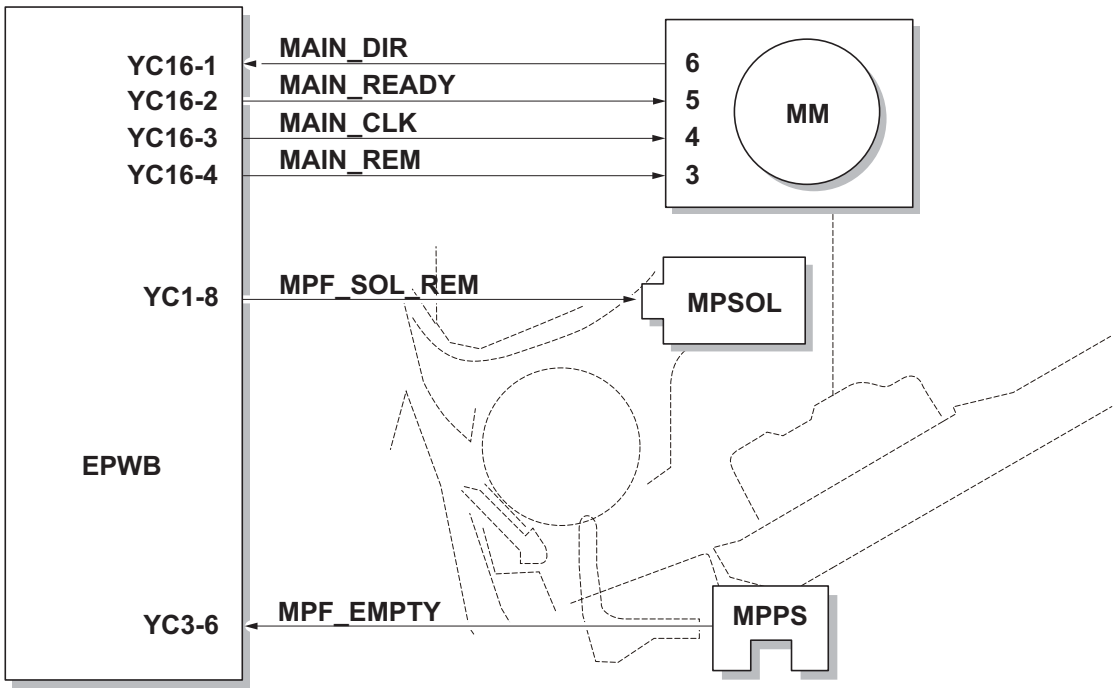

Figure 2-1-4 MP tray paper feed section block diagram

(3) Conveying section

The conveying section conveys paper to the transfer/separation section as paper feeding from the cassette or MP tray, or as paper refeeding for duplex printing. Paper by feeding is conveyed by the paper feed roller to the position where the registration sensor (RS) is turned on, and then sent to the transfer/separation section by the right registration roller and left registration roller.

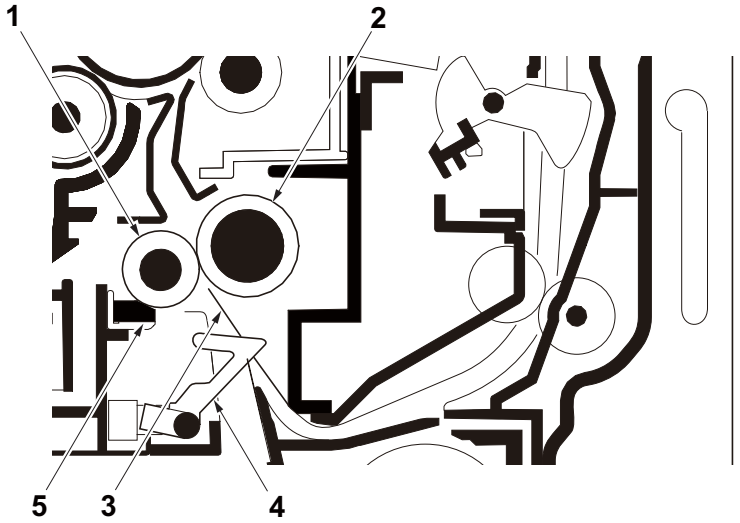

Figure 2-1-5 Conveying section

1. Left registration roller
2. Right registration roller
3. Registration guide
4. Actuator (registration sensor)
5. Registration cleaner

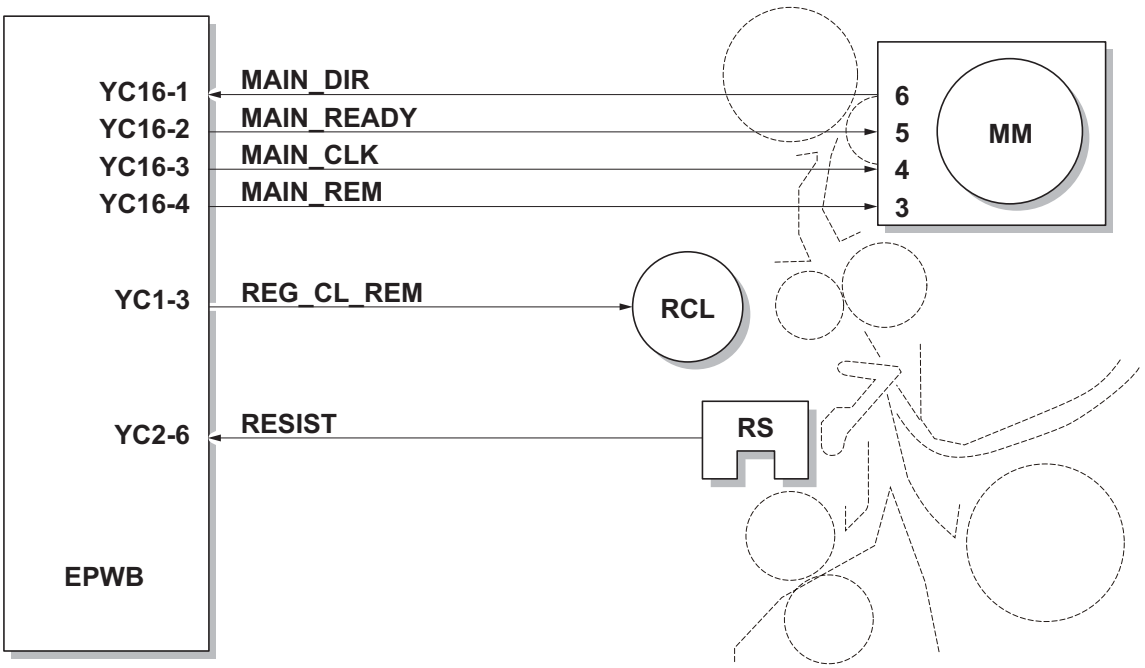

Figure 2-1-6 Paper conveying section block diagram

2-1-2 Drum section

The drum section consists of the drum, the charger roller unit, and the cleaning unit, and the drum surface is uniformly charged in preparation for formation of residual image by laser beam.
After transfer is complete, toner remaining on the drum surface is chipped off with the cleaning blade and is collected to the waste toner box with the drum screw. The cleaning lamp (CL) consists of LEDs and removes residual charge on the drum before main charging.

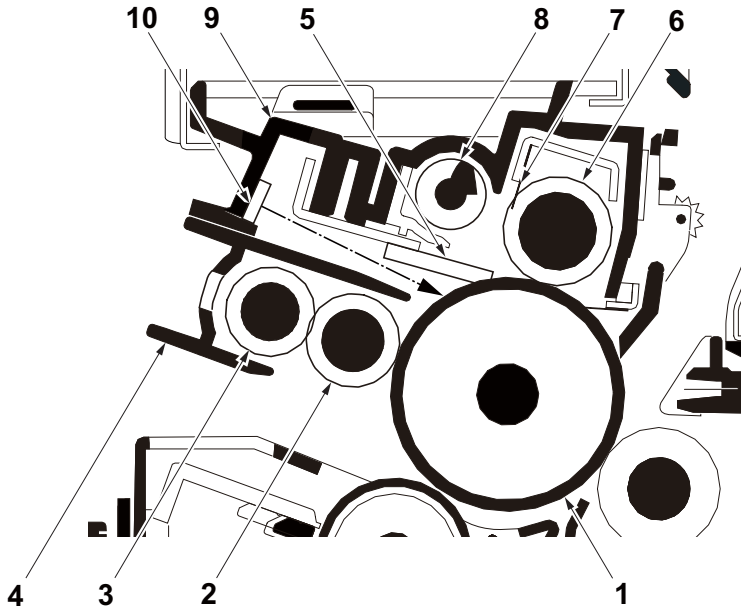

Figure 2-1-7 Drum section

1. Drum
2. Charger roller
3. Charger cleaning roller
4. Charger case
5. Cleaning blade
6. Cleaning roller
7. Scraper
8. Sweep roller
9. Drum frame
10. Cleaning lamp (CL)

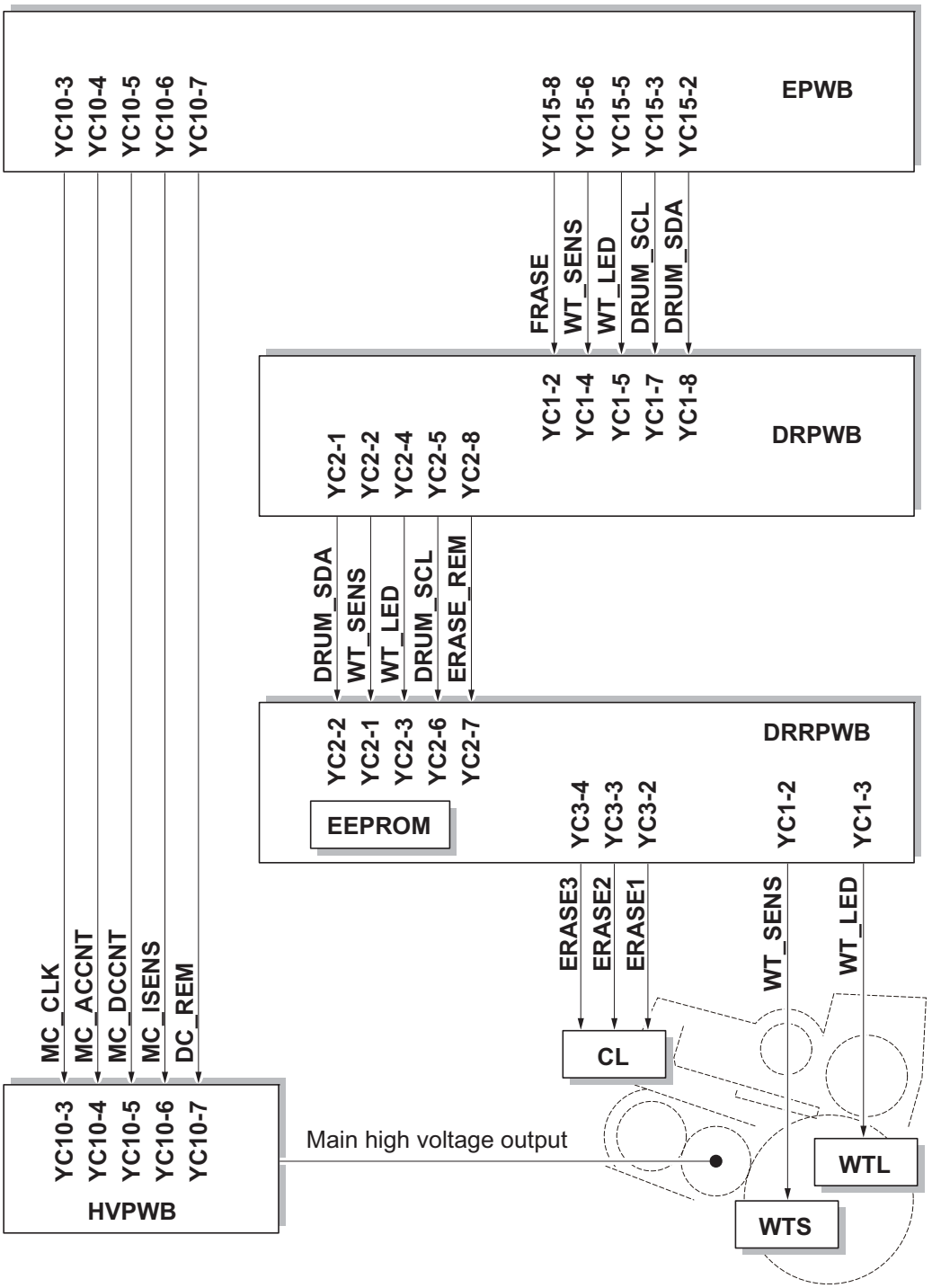

Figure 2-1-8 Drum section block diagram

2-1-3 Developing section

The developing unit consists of the developing roller that forms the magnetic brush, the developing blade and the developing screws that agitate the toner.Also, the toner sensor (TS) checks whether or not toner remains in the developing unit.

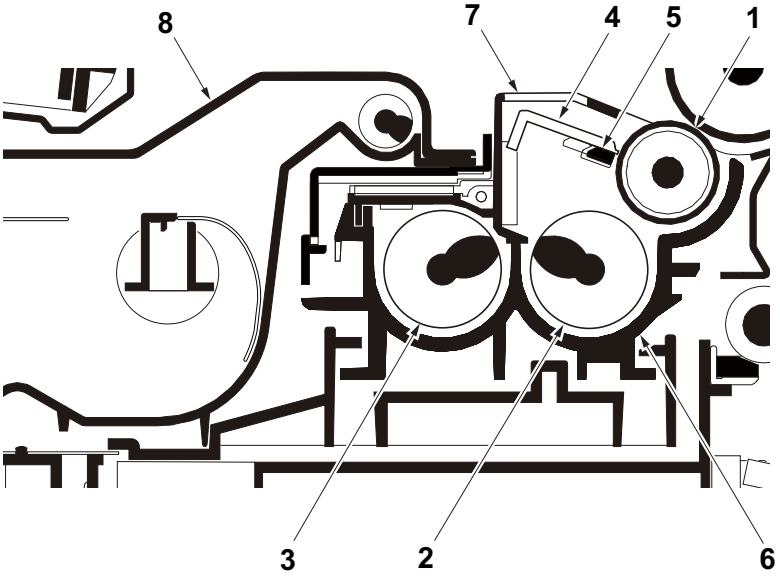

Figure 2-1-9 Developing section

1. Developing roller
2. Developing screw A
3. Developing screw B
4. Developing blade
5. Magnet blade
6. Developer case
7. Upper developer cover
8. Toner container

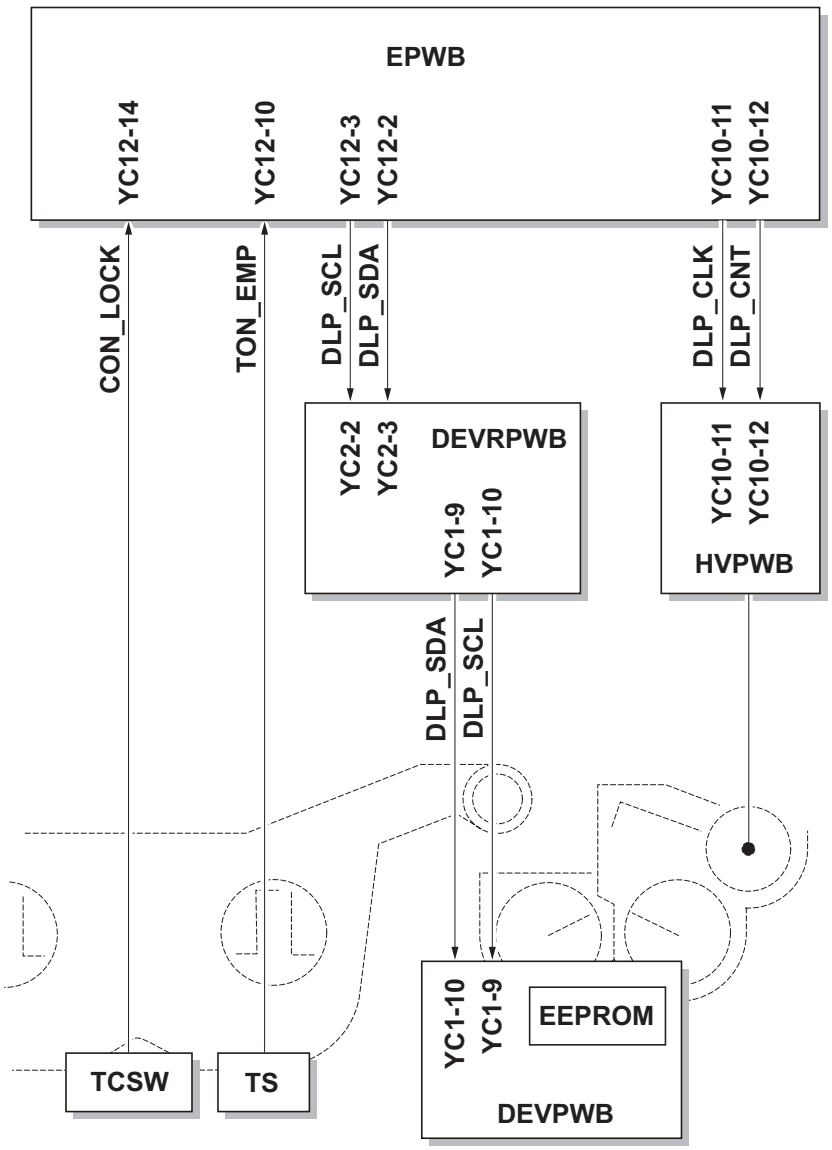

Figure 2-1-10 Developing section block diagram

2-1-4 Optical section

The optical section consists of the image scanner section for scanning and the laser scanner section for printing.

(1) Image scanner section

The original image is illuminated by the exposure lamp (EL) and scanned by the CCD image sensor in the CCD PWB (CCDPWB) via the three mirrors and ISU lens, the reflected light being converted to an electrical signal.
If a document processor is used, the image scanner unit stops at the position of the DP contact glass and scans sequentially one row of the image on the original in synchronization with the moving timing of the original in the sub scan direction by driving the DP.

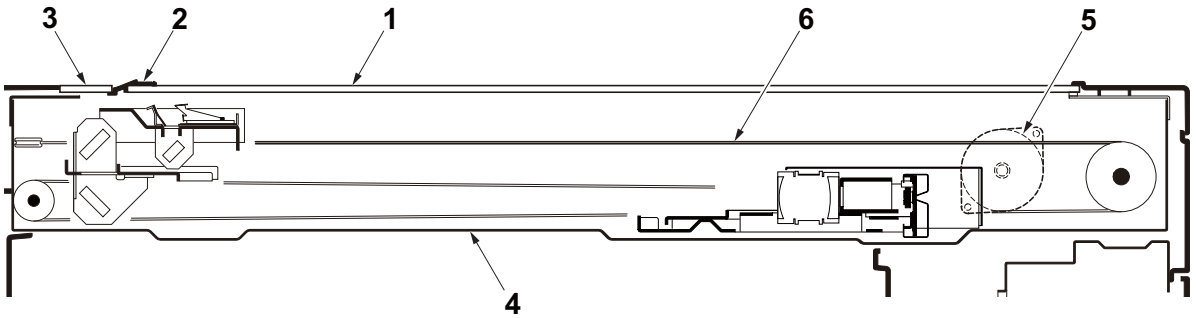

Figure 2-1-11 Scanner unit

1. Platen
2. Original size indicator plate
3. DP contact glass
4. ISU frame
5. ISU motor (ISUM)
6. ISU wire

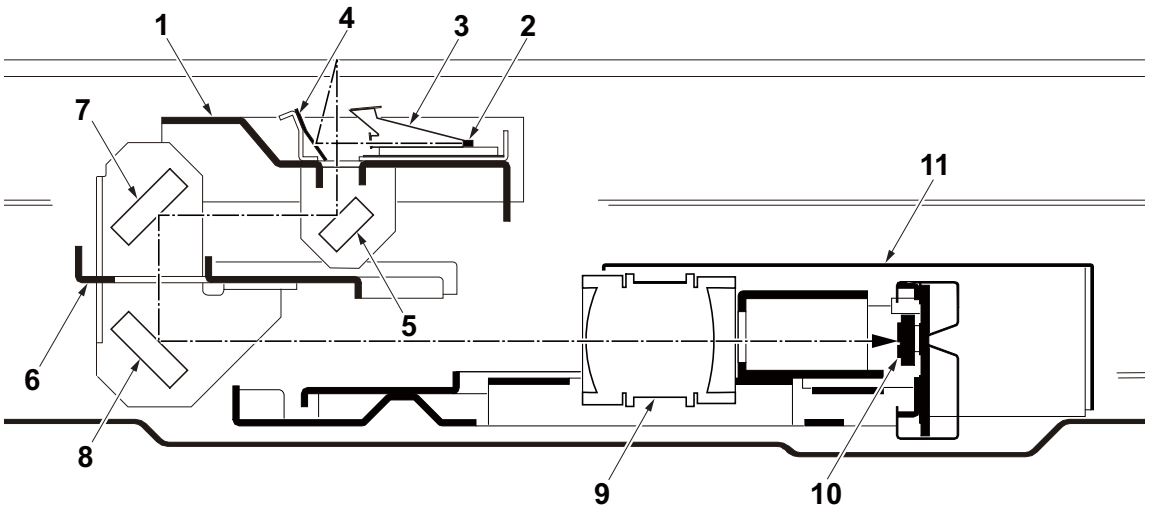

Figure 2-1-12 Image scanner unit (ISU)

1. The first mirror frame
2. Exposure lamp (EL)
3. Exposure lens
4. Reflector
5. Mirror A
6. The second mirror frame
7. Mirror B
8. Mirror C
9. ISU lens
10. CCD PWB (CCDPWB)

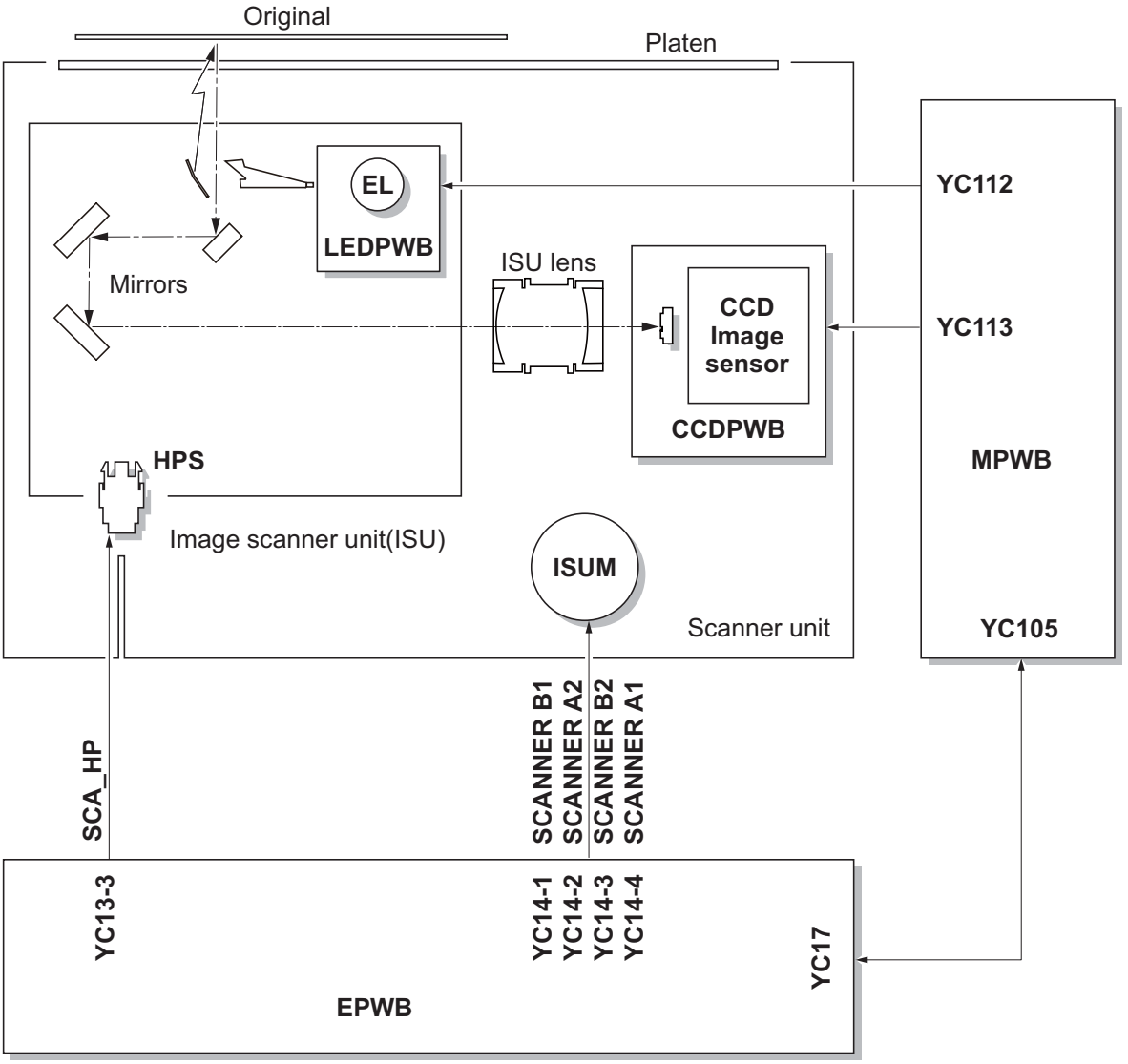

Figure 2-1-13 Scanner unit block diagram

(2) Laser scanner section

The charged surface of the drum is then scanned by the laser beam from the laser scanner unit. The laser beam is dispersed as the polygon motor (PM) revolves to reflect the laser beam over the drum. Various lenses and mirror are housed in the laser scanner unit, adjust the diameter of the laser beam, and focalize it at the drum surface. Also the LSU cleaning motor (LSUCM) is activated to conduct automatically cleaning of the LSU dust shield glass.

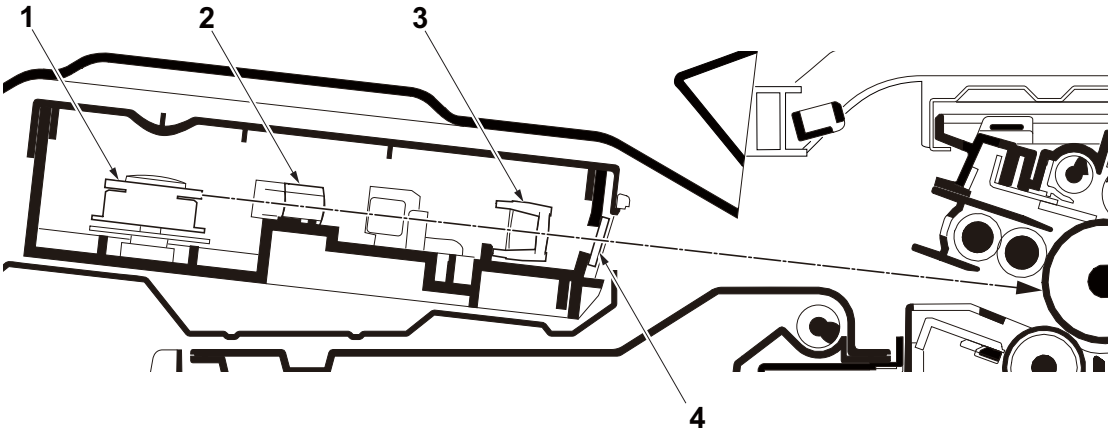

Figure 2-1-14 Laser scanner unit (LSU)

1. Polygon motor (PM)
2. fθ sub lens
3. fθ main lens
4. LSU dust shield glass

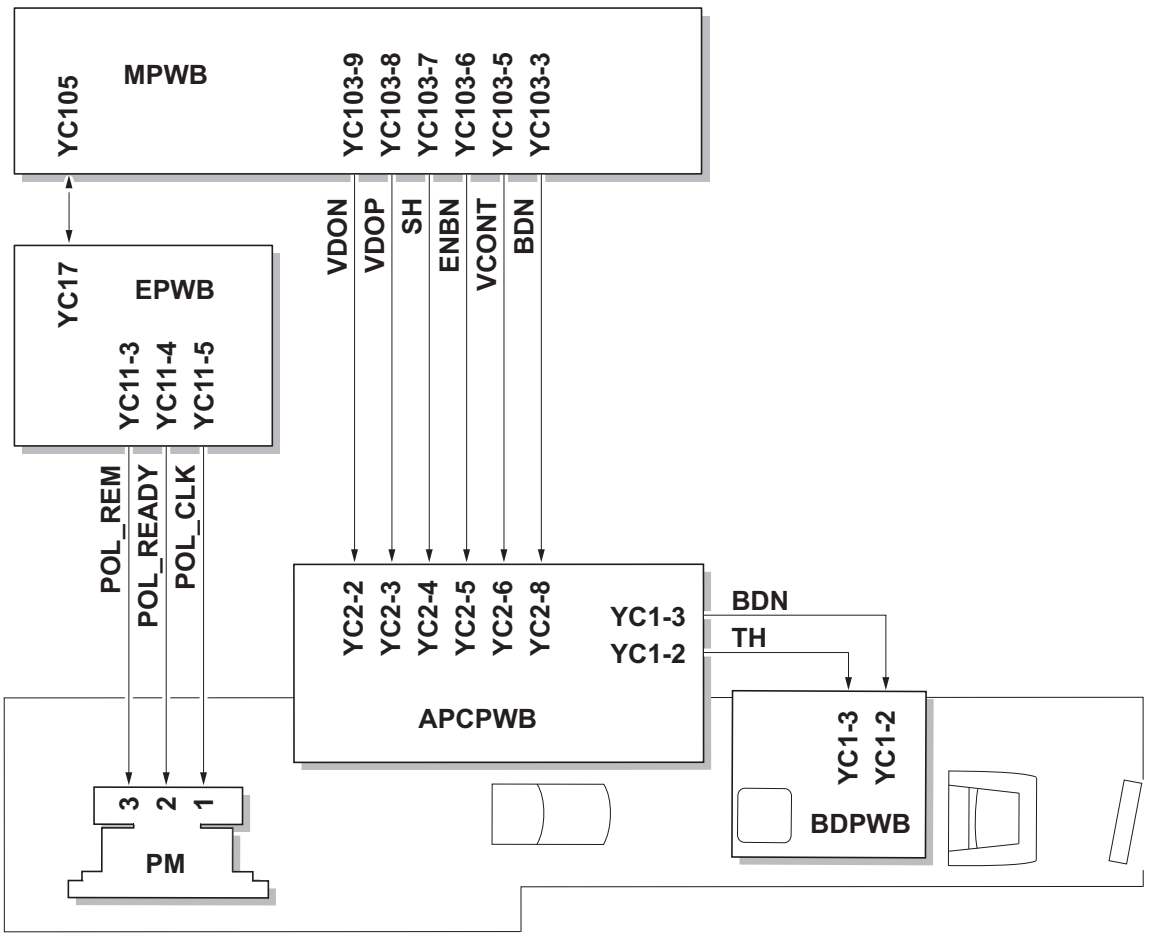

Figure 2-1-15 Laser scanner unit block diagram

2-1-5 Transfer/Separation section

The transfer and separation section consists mainly of the transfer roller, separation electrode and drum separation claws.
A high voltage generated by the high voltage PWB (HVPWB) is applied to the transfer roller for transfer charging.
Paper after transfer is separated from the drum by applying separation charging that is output from the high voltage PWB (HVPWB) to the separation electrode.

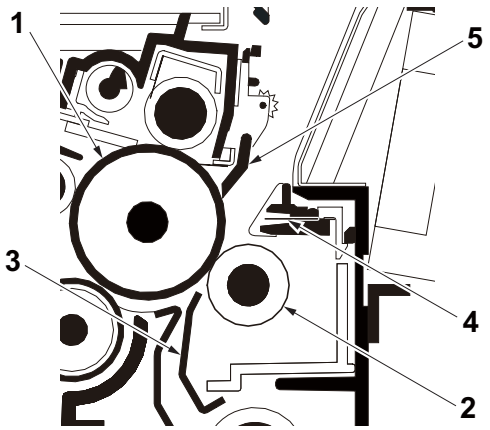

Figure 2-1-16 Transfer/Separation section

1. Drum
2. Transfer roller
3. Paper chute guide
4. Separation needle
5. Drum separation claws

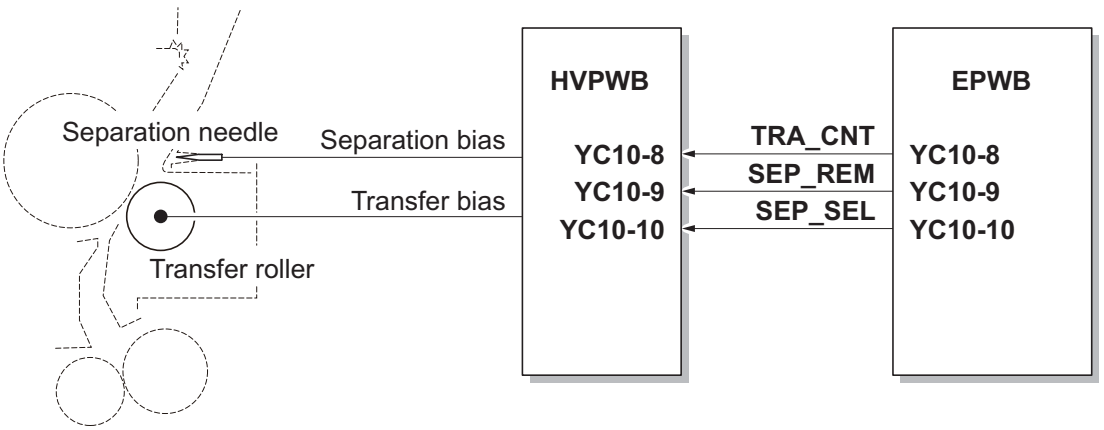

Figure 2-1-17 Transfer/Separation section block diagram

2-1-6 Fuser section

The paper sent from the transfer/separation section is interleaved between the heat roller and the press roller. The heat roller is heated by the fuser heater (FH), and the toner is fused by heat and pressure and fixed onto the paper because the press roller is pressed by the fuser press spring. The surface temperature of heat roller is detected by the fuser thermistor (FTH) and controlled by the engine PWB (EPWB). If the fuser section shows extremely high temperature, the power line will be shut off and the fuser heater (FH) is forced to turn off.

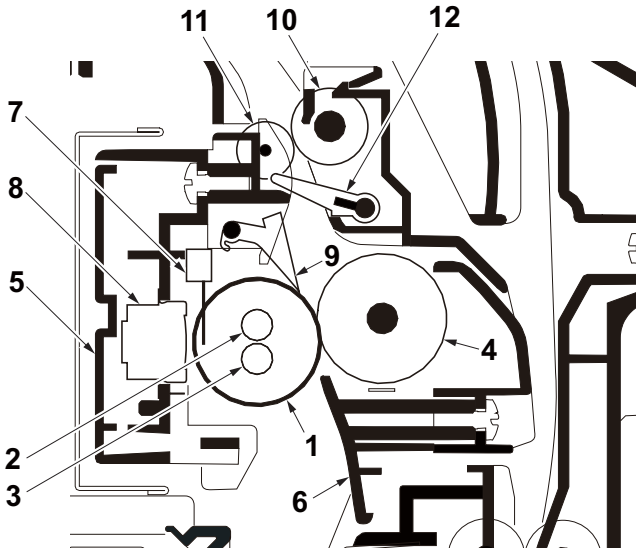

Figure 2-1-18 Fuser section

1. Heat roller
2. Fuser heater 1(FH1)
3. Fuser heater 2(FH2)
4. Press roller
5. Upper fuser frame
6. Fuser paper guide
7. Fuser thermistor (FTH)
8. Fuser thermostat (FTS)
9. Separators
10. Eject roller
11. Eject pulley
12. Actuater(eject sensor)

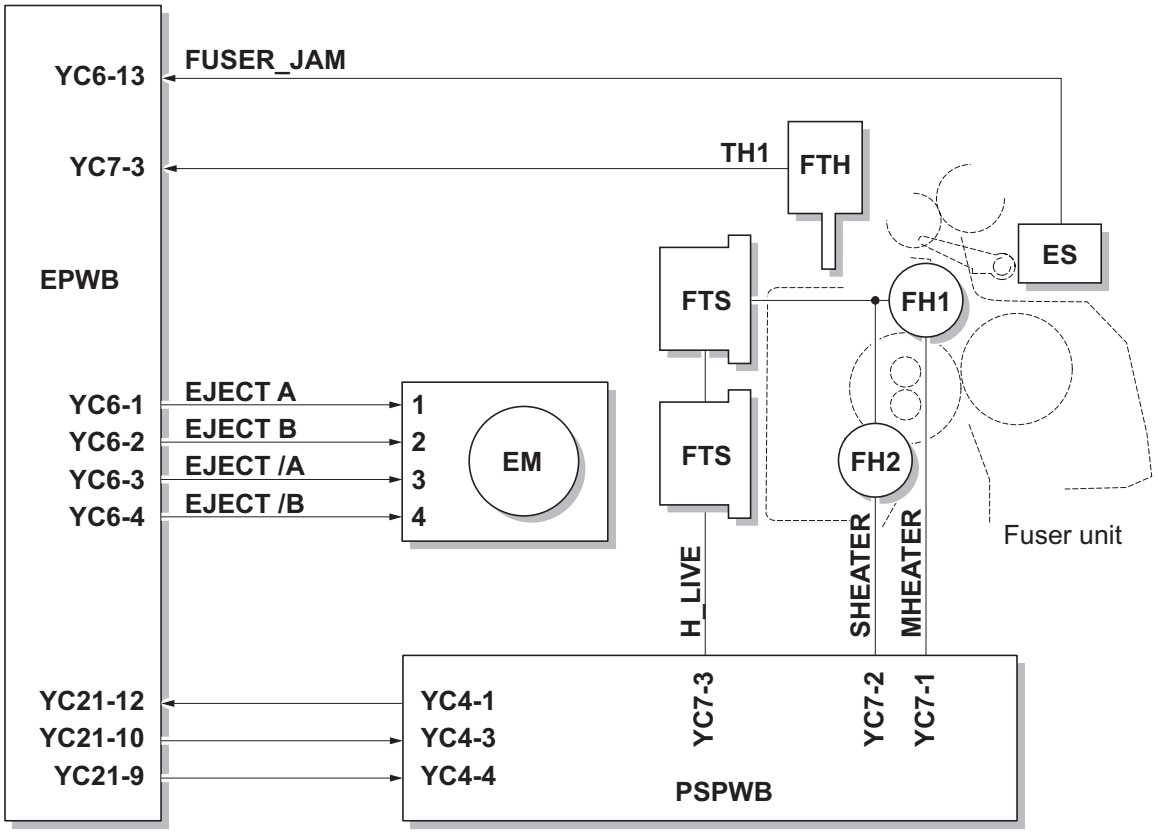

Figure 2-1-19 Fuser section block diagram

2-1-7 Eject/Feedshift section

The paper eject/feedshift section consists of the conveying path which sends the paper that has passed the fuser section to the inner tray, the job separator tray or the duplex conveying section.

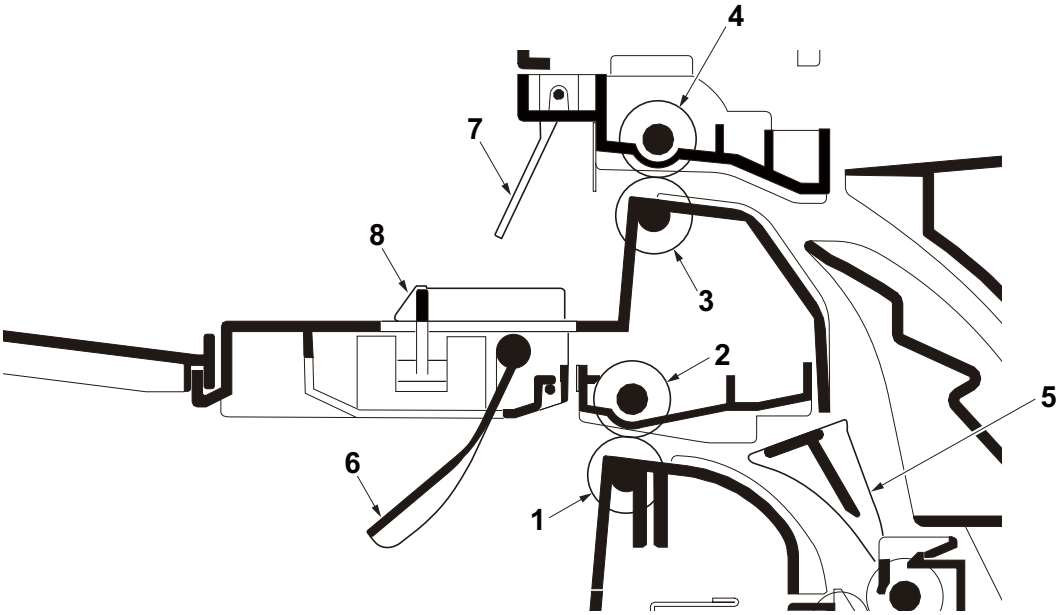

Figure 2-1-20 Eject/Feedshift section

1. Eject roller
2. Eject pulley
3. Eject roller
4. Eject pulley
5. Feedshift guide
6. Actuator (paper full sensor)
7. Actuator (job paper full sensor)
8. Actuator (job eject paper sensor)

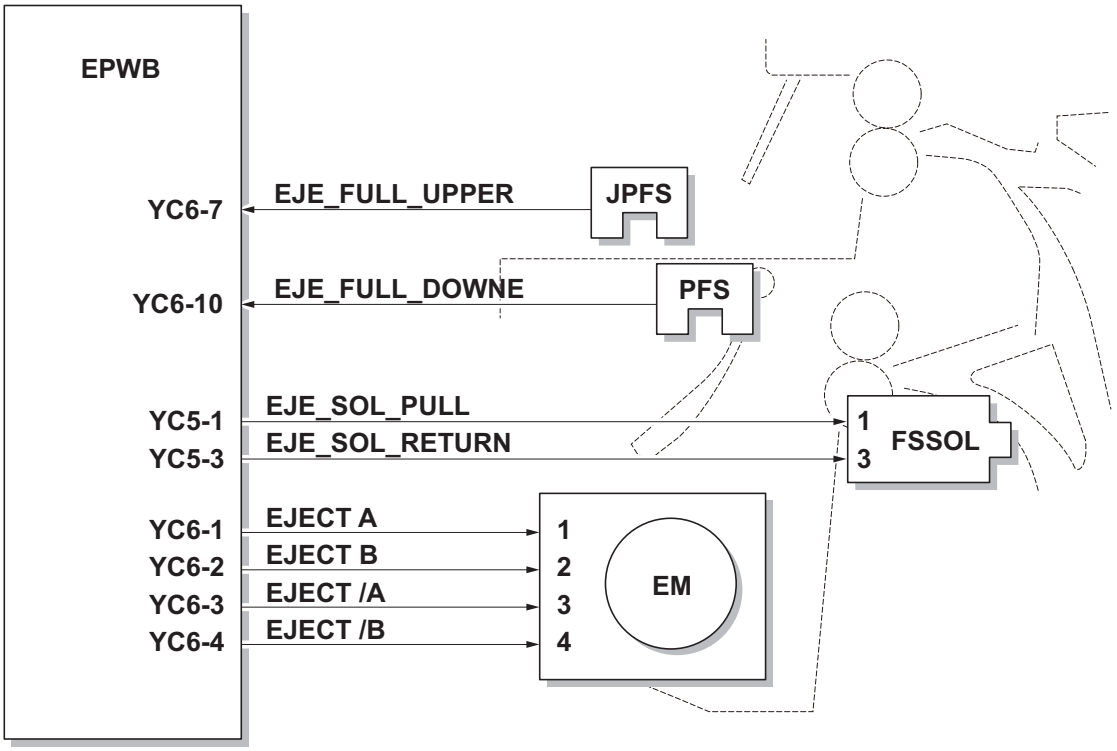

Figure 2-1-21 Eject/Feed shift section block diagram

2-1-8 Duplex conveying section

The duplex conveying section consists of conveying path which sends the paper sent from the eject/feedshift section to the paper feed/conveying section when duplex printing.

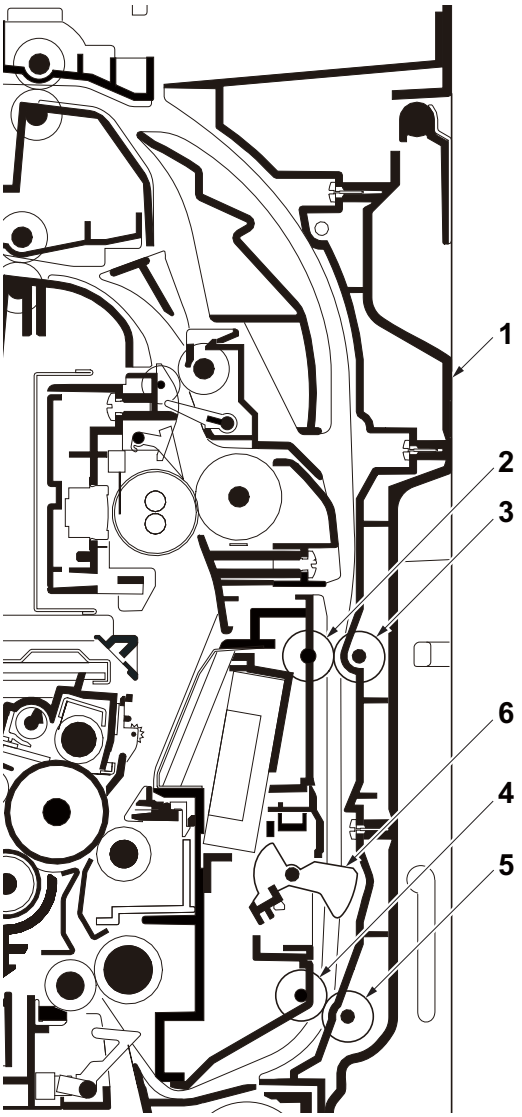

Figure 2-1-22 Duplex conveying section

1. Right cover 1
2. Duplex feed roller A
3. Duplex feed pulley A
4. Duplex feed roller B
5. Duplex feed pulley B
6. Actuater(duplex sensor)

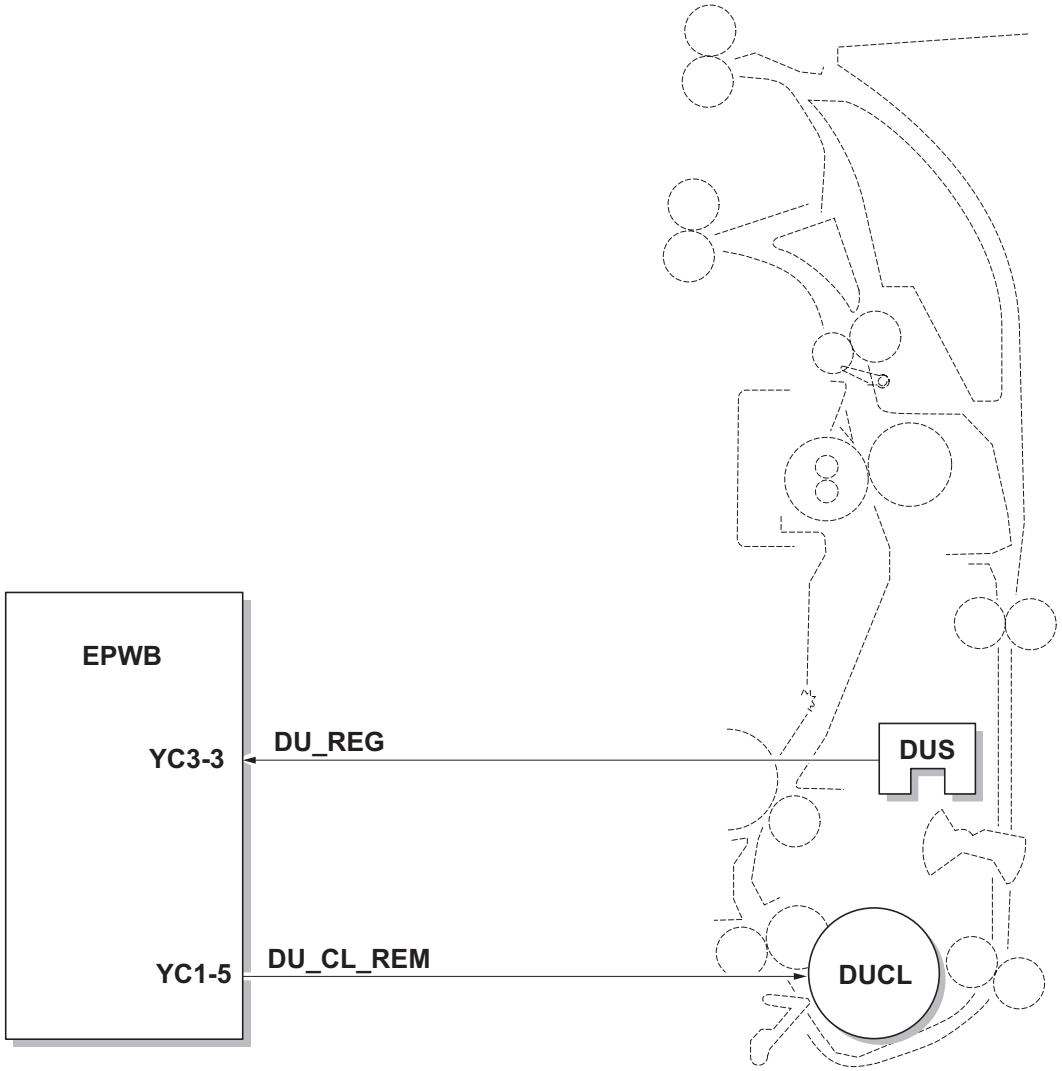

Figure 2-1-23 Duplex conveying section block diagram

2-1-9 Document processor

(1) Original feed section

The original feed section consists of the parts shown in figure. An original placed on the original tray is conveyed to the original conveying section. Original is fed by the rotation of the DP forwarding pulley and DP paper feed roller.

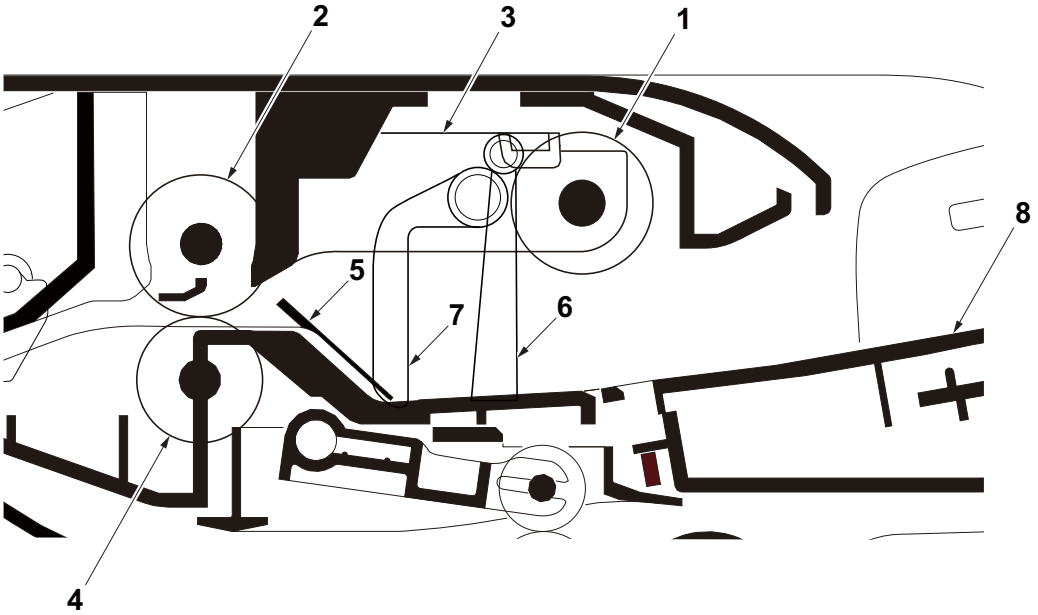

Figure 2-1-24 Original feed section

1. DP forwarding pulley
2. DP paper feed roller
3. DP feed holder
4. DP separation pulley
5. Front separation pad
6. Actuator (DP original sensor)
7. PF stopper
8. Original tray

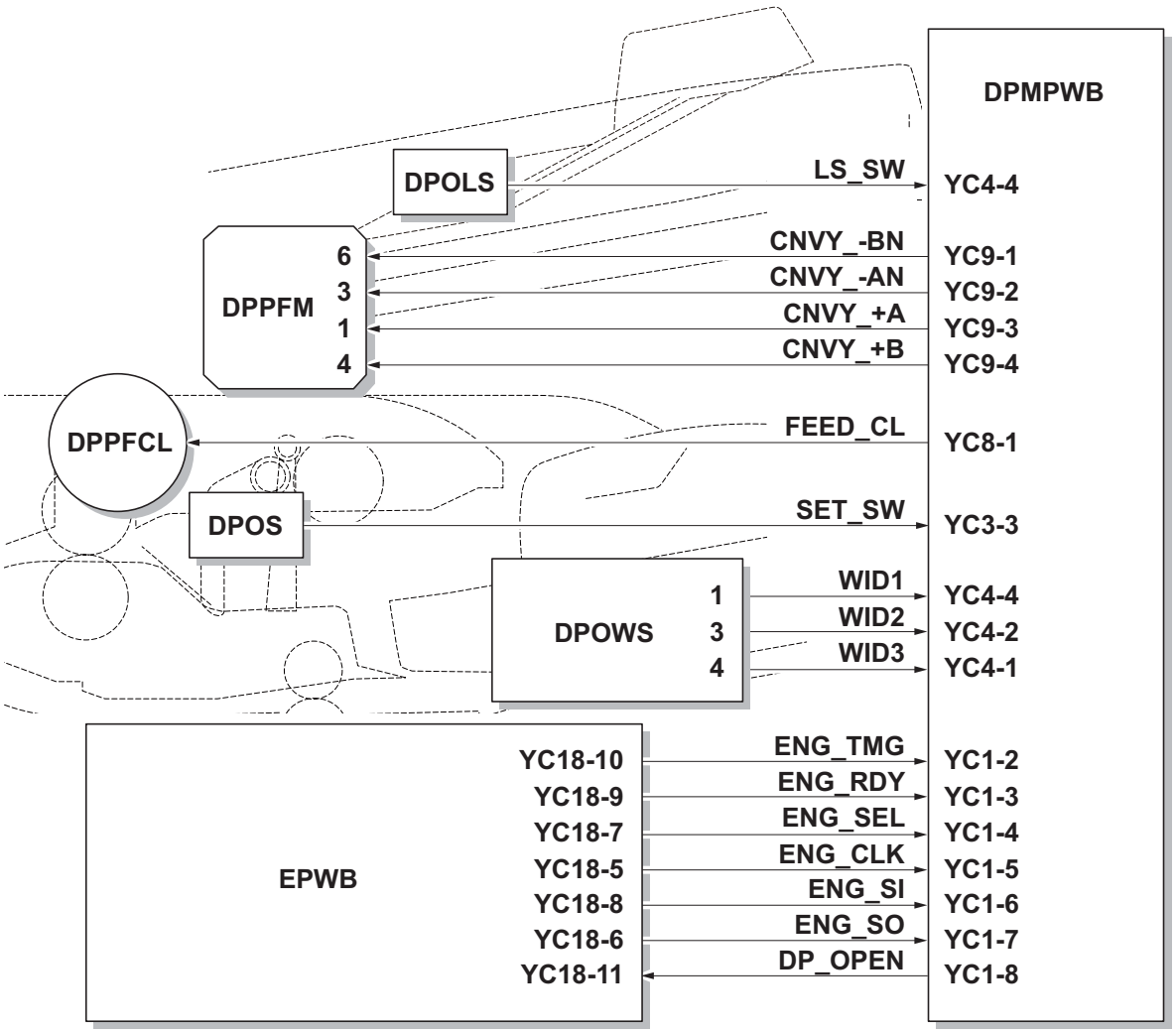

Figure 2-1-25 Original feed section block diagram

(2) Original conveying section

The original conveying section consists of the parts shown in figure. A conveyed original is scanned by the optical section (CCD) of main machine when it passes through the slit glass of main machine.

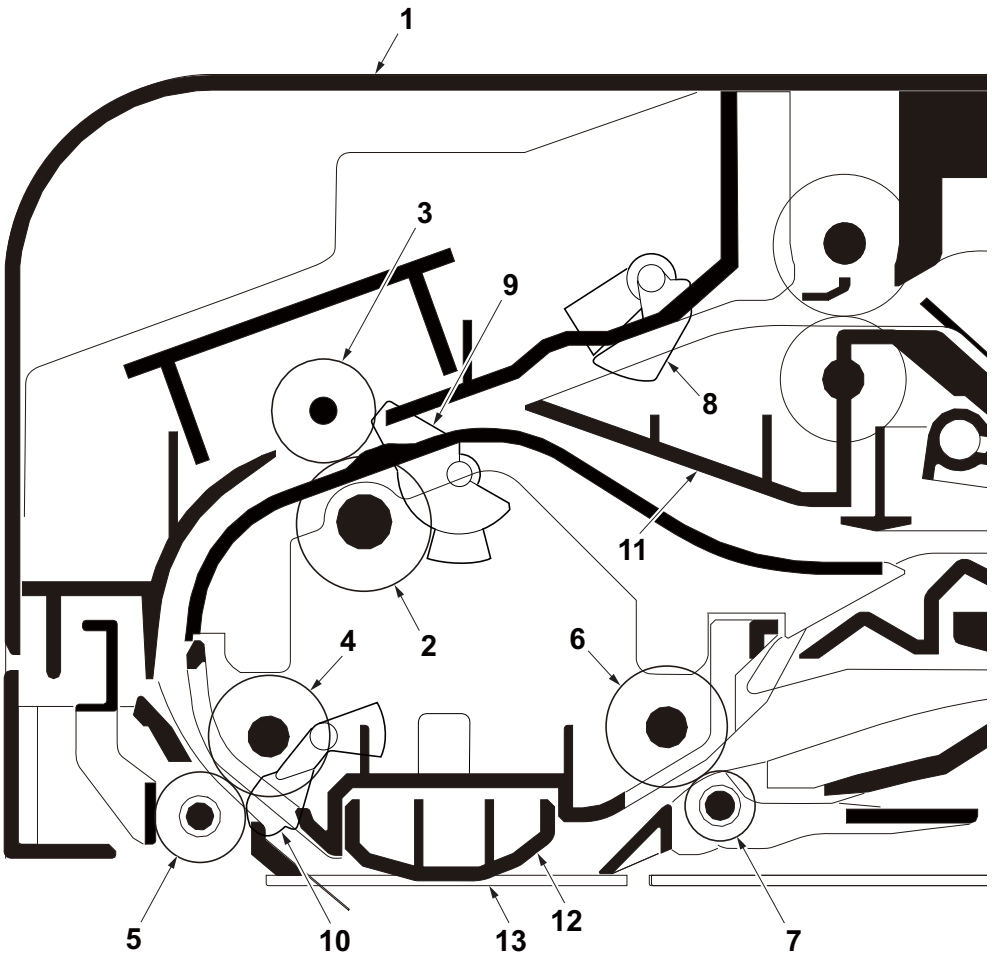

Figure 2-1-26 Original conveying section

1. DP top cover
2. DP registration roller
3. DP registration pulley
4. Conveying roller
5. Conveying pulley
6. Eject roller
7. Eject pulley
8. Actuator (DP paper feed sensor)
9. Actuator (DP registration sensor)
10. Actuator (DP timing sensor)
11. Switchback guide
12. Reading guide
13. Slit glass

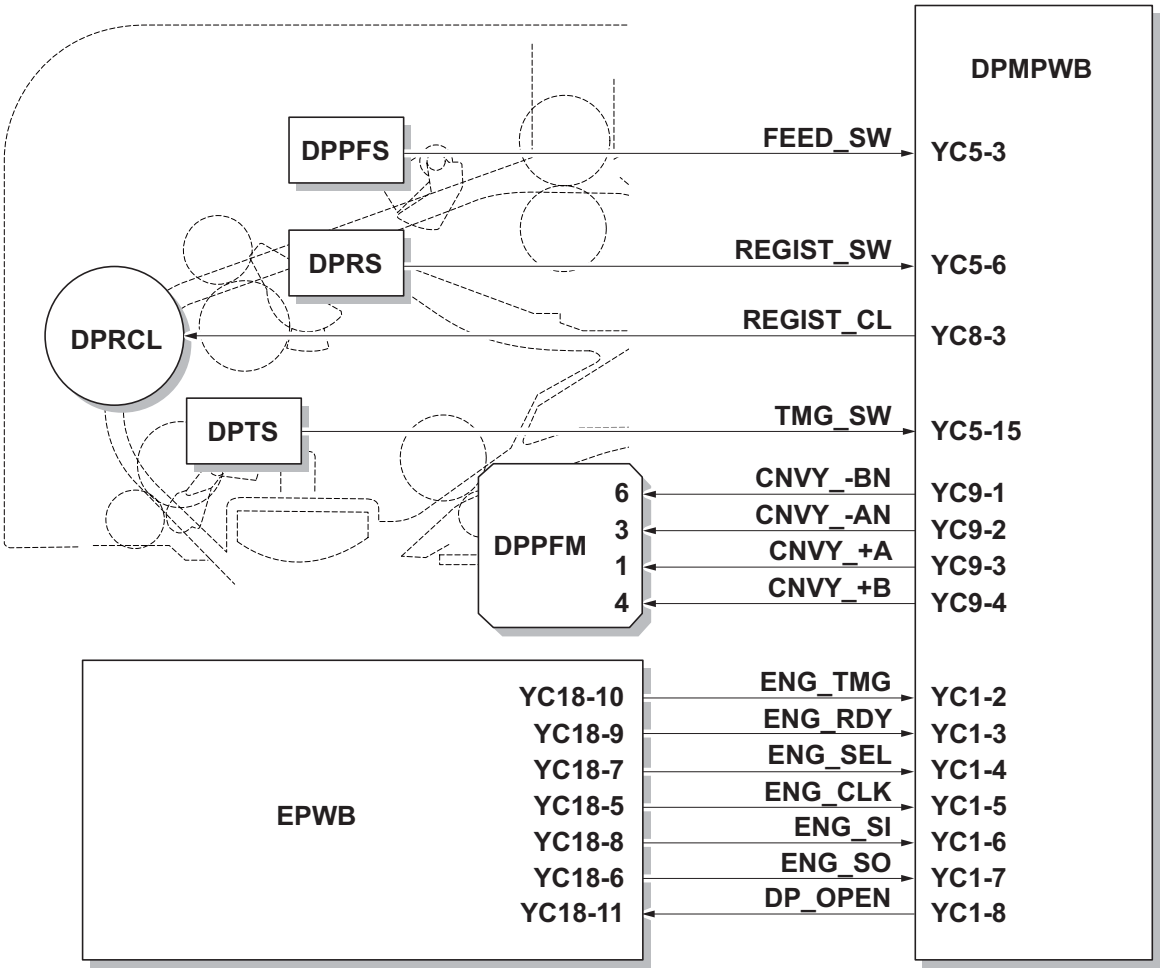

Figure 2-1-27 Original conveying section block diagram

(3) Original switchback/eject sections

The original switchback/eject sections consists of the parts shown in figure. An original of which scanning is complete is ejected to the original eject table by the eject roller. In the case of duplex switchback scanning, an original is conveyed temporarily to the switchback tray and conveyed again to the original conveying section by the switchback roller.

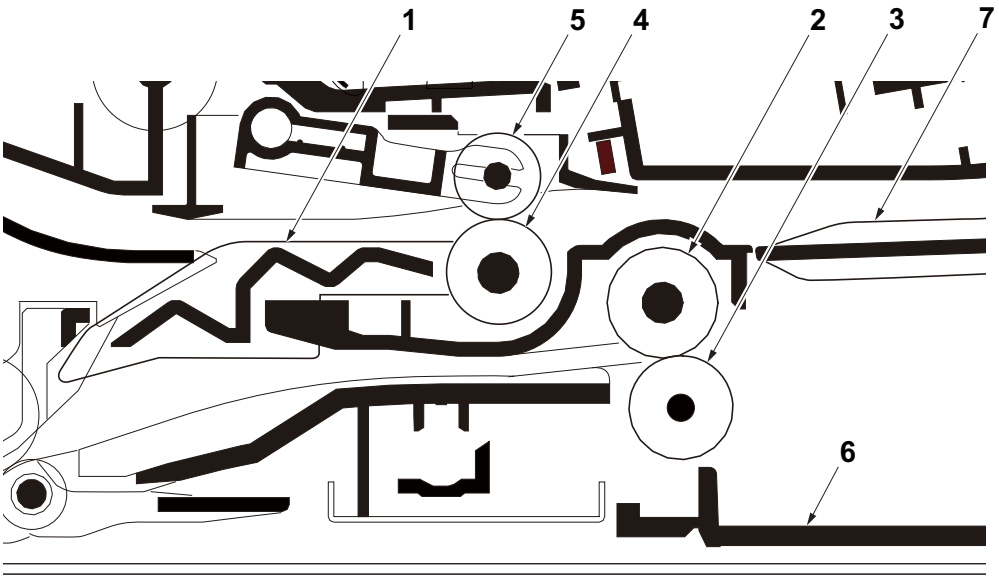

Figure 2-1-28 Original switchback/eject sections

1. Feedshift guide
2. Eject roller
3. Eject pulley
4. Switchback roller
5. Switchback pulley
6. Original eject table
7. Switchback tray

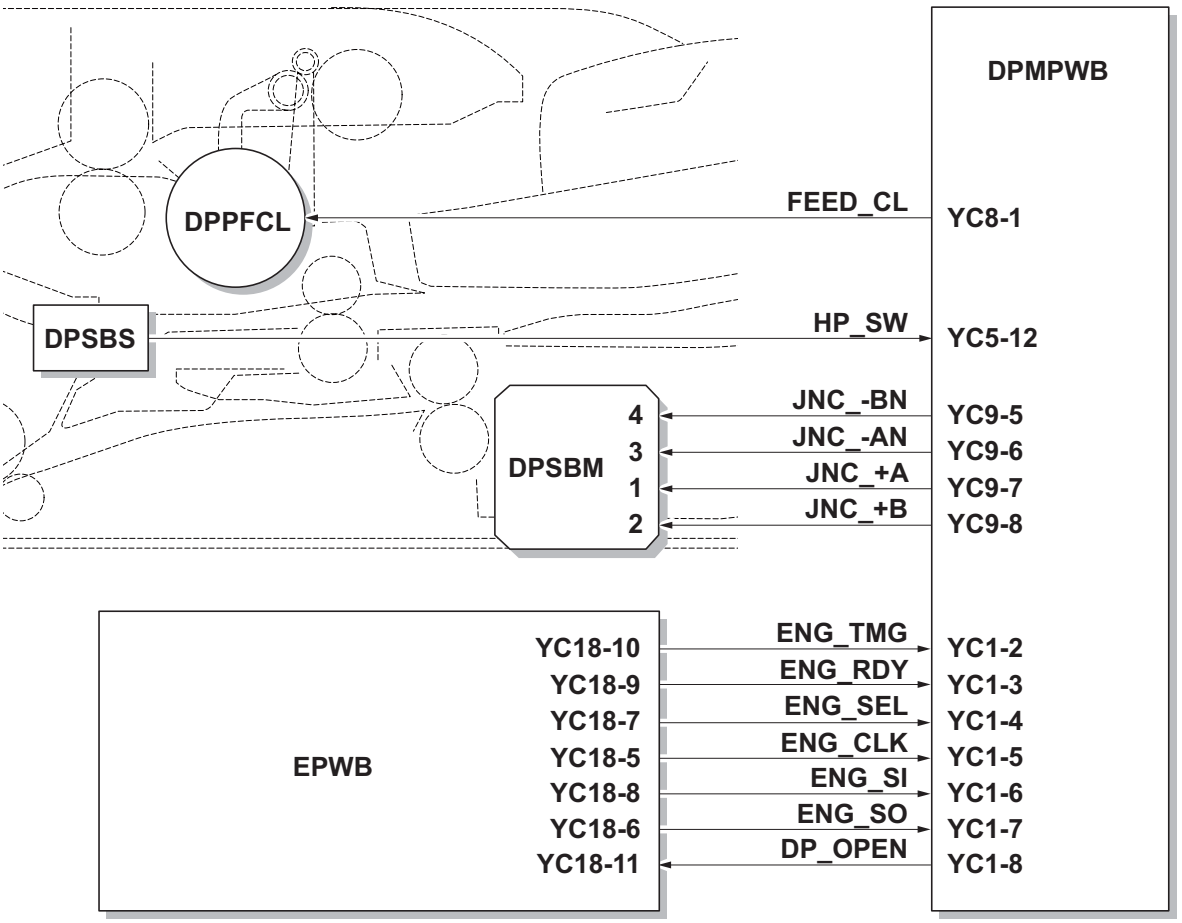

Figure 2-1-29 Original switchback/eject sections block diagram

2-2-1 Electrical parts layout

(1) PWBs

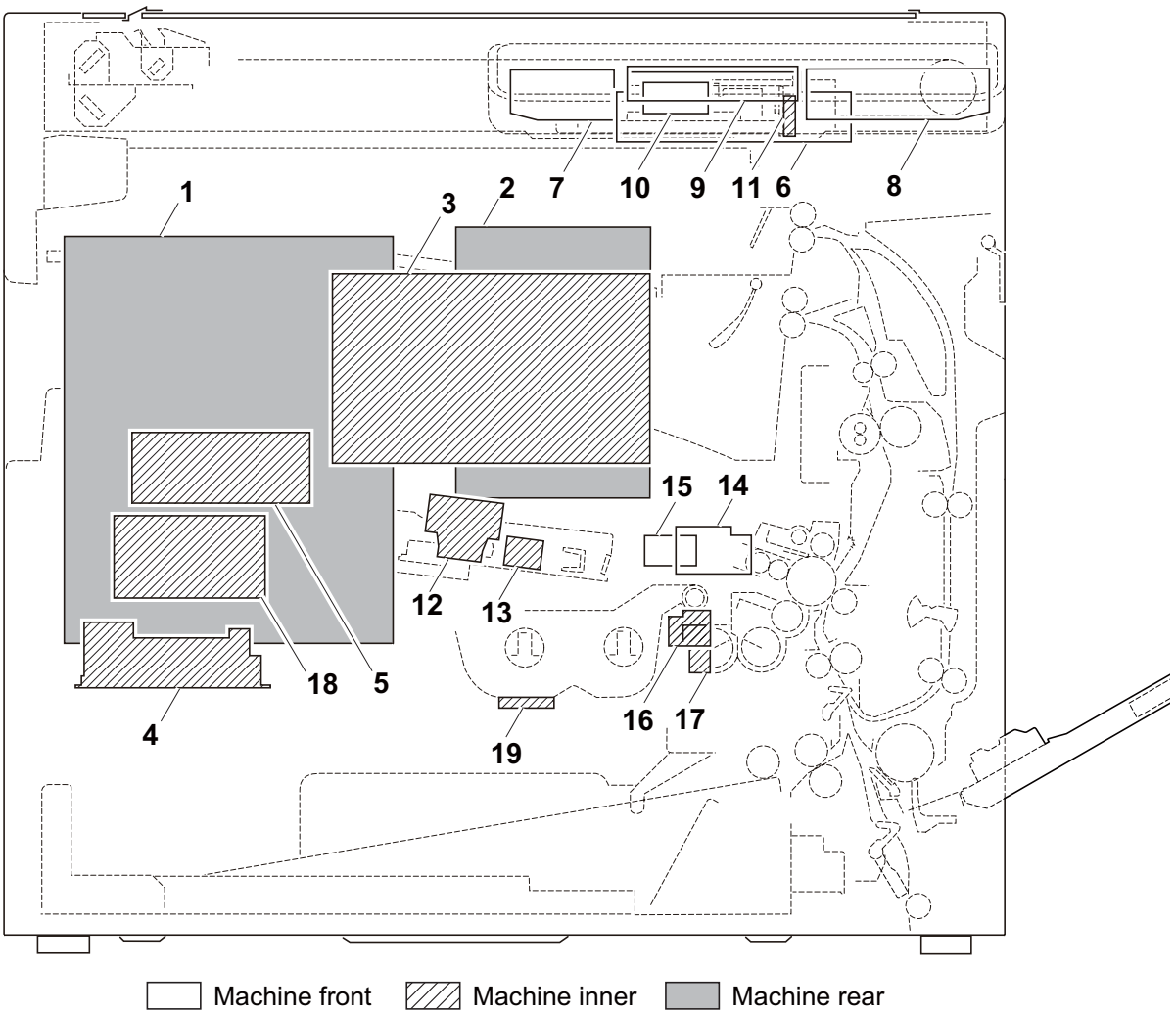

Figure 2-2-1 PWBs

1. Main PWB (MPWB) ..... Controls the software such as the print data processing and provides the interface with computers.
2. Engine PWB (EPWB)..... Controls printer hardware such as high voltage/bias output control, paper conveying system control, and fuser temperature control, etc.
3. High voltage PWB (HVPWB) ..... Generates main charging, developing bias, transfer bias.
4. Power source PWB (PSPWB) ..... After full-wave rectification of AC power source input, switching for converting to 24 V DC for output. Controls the fuser heater.
5. Power source PWB sub (PSPWB-S).... 5V output control when standing by.
6. Operation panel PWB main (OPPWB-M)..... Consists the LCD, LED indicators and key switches.
7. Operation panel PWB left (OPPWB-L)..... Consists the LED indicators and key switches.
8. Operation panel PWB right (OPPWB-R) ..... Consists the LED indicators and key switches.
9. LCD PWB (LCDPWB)..... Controls the LCD display.

10. LCD relay PWB (LCDRPWB) ..... Consists of wiring relay circuit between operation panel PWB main and LCD PWB.
11. CCD PWB (CCDPWB)..... Reads the image of originals.
12. APC PWB (APCPWB) ..... Generates and controls the laser beam.
13. BD PWB (PDPWB) ..... Controls horizontal synchronizing timing of laser beam.
14. Drum PWB (DRPWB) ..... Relays wirings from electrical components on the drum unit. Drum individual information in EEPROM storage.
15. Drum relay PWB (DRRPWB)..... Consists of wiring relay circuit between engine PWB and the drum unit.
16. Developing PWB (DEVPWB)..... Relays wirings from electrical components on the developing unit. Developing individual information in EEPROM storage.
17. Developing relay PWB (DEVRPWB) .... Consists of wiring relay circuit between engine PWB and the developer unit.
18. Relay PWB (RYPWB) ..... Consists of wiring relay circuit between main PWB and power source PWB.
19. RFID PWB (RFPWB) ..... Reads the container information.

List of correspondences of PWB names

No.	Name used in service manual	Name used in parts list
1	Main PWB (MPWB)	PARTS PWB MAIN ASSY SP PARTS PWB MAIN ASSY SP EU
2	Engine PWB (EPWB)	PARTS PWB ENGINE ASSY SP
3	High voltage PWB (HVPWB)	PARTS HVU SP
4	Power source PWB (PSPWB)	PARTS LVU MAIN 120 SP PARTS LVU MAIN 200 SP
5	Power source PWB sub(PSPWB-S)	PARTS LVU SUB 100 SP PARTS LVU SUB 200 SP
6	Operation panel PWB main(OPPWB-M)	PARTS PWB PANEL MAIN ASSY SP PARTS OPERATION UNIT SP
7	Operation panel PWB left(OPPWB-L)	PARTS OPERATION UNIT SP
8	Operation panel PWB right(OPPWB-R)	
9	LCD PWB (LCDPWB)	
10	LCD relay PWB (LCDRPWB)	
11	CCD PWB (CCDPWB)	PARTS ISU
12	APC PWB (APCPWB)	LK-475
13	BD PWB (BDPWB)	
14	Drum PWB (DRPWB)	DK-475 MK-475/MAINTENANCE KIT MK-477/MAINTENANCE KIT MK-479/MAINTENANCE KIT
15	Drum relay PWB (DRRPWB)	PARTS PWB DRUM CONNECT ASSY SP
16	Developing PWB (DEVPWB)	DV-475 MK-475/MAINTENANCE KIT MK-477/MAINTENANCE KIT MK-479/MAINTENANCE KIT
17	Developing relay PWB (DEVRPWB)	PARTS PWB DEVE CONNECT ASSY SP
18	Relay PWB (RYPWB)	PARTS LVU MAIN 200 SP
19	RFID PWB (RFPWB)	PARTS PWB RFID ASSY SP

(2) Switches and sensors

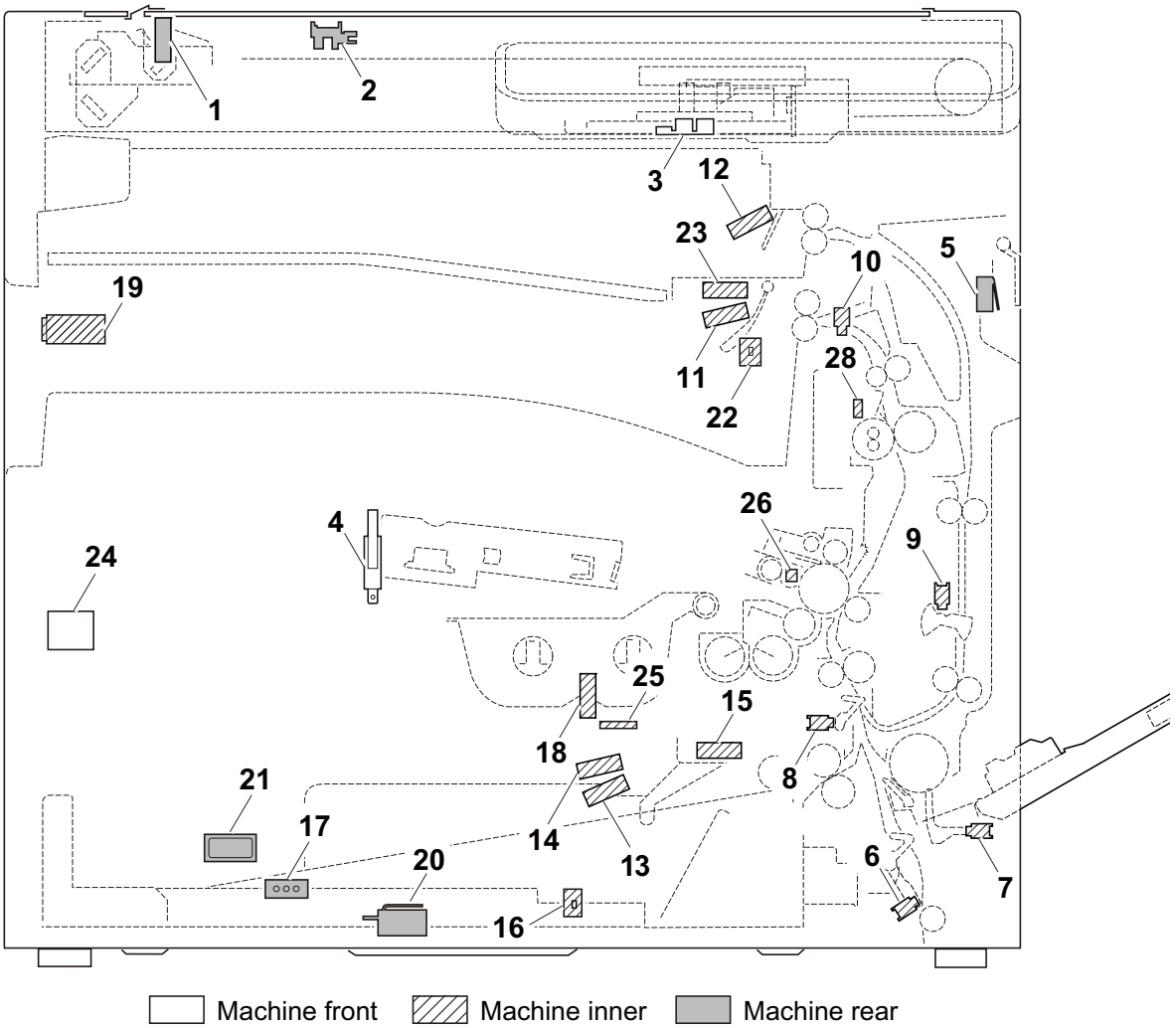

Figure 2-2-2 Switches and sensors

1. Home position sensor (HPS) ..... Detects the ISU in the home position.
2. Original detection switch (ODSW) ..... Operates the original size detection sensor.
3. Original size sensor (OSS) ..... Detects the size of the original.
4. Front cover switch (FCSW)..... Detects the opening and closing of the front cover.
5. Right cover switch (RCSW) ..... Detects the opening and closing of the right cover.
6. Feed sensor (FS)..... Detects a paper misfeed in the vertical conveying section.
7. MP paper sensor (MPPS)..... Detects the presence of paper on the MP tray.
8. Registration sensor (RS)..... Controls the secondary paper feed start timing.
9. Duplex sensor (DUS)..... Detects a paper jam in the duplex section.
10. Eject sensor (ES)..... Detects a paper misfeed in the fuser or eject section.
11. Paper full sensor (PFS)..... Detects the paper full in the inner tray.
12. Job paper full sensor (JPFS) ..... Detects the paper full in the job separator tray.
13. Paper sensor 1 (PS1) ..... Detects the presence of paper in the cassette.
14. Paper sensor 2 (PS2) ..... Detects the presence of paper in the cassette.
15. Lift sensor (LS)..... Detects activation of upper limit of the bottom plate.
16. Paper size width switch (PWSW)..... Detects the width of paper in the cassette.
17. Paper size length switch (PLSW) ..... Detects the length of paper in the cassette.
18. Toner container lock sensor (TCLS) ..... Detects the lock of toner in the toner container.

19. Main power switch (MSW) ..... Turns ON/OFF the AC power source.
20. Interlock switch (ILSW) ..... Shuts off 24 V DC power line when the front cover is opened.
21. Cassette heater switch (CHSW) ..... Turns ON/OFF the cassette heater power source.
22. Bridge detection switch (BRDSW) ..... Detects the presence the bridge.
23. Job eject papersensor (JEPS) ..... Detects the presence of paper in the job separator.
24. Temperature sensor (TEMS)..... Detects temperature and absolute humidity in machine.
25. Toner sensor (TS) ..... Detects the amount of toner remainder in the developing unit.
26. Waste toner sensor (WTS)..... Detects when the waste toner box is full.
27. Fuser thermistor (FTH) ..... Detects the heat roller temperature.
28. Toner container switch (TCSW) ..... Detects the presence of the toner container.

(3) Motors

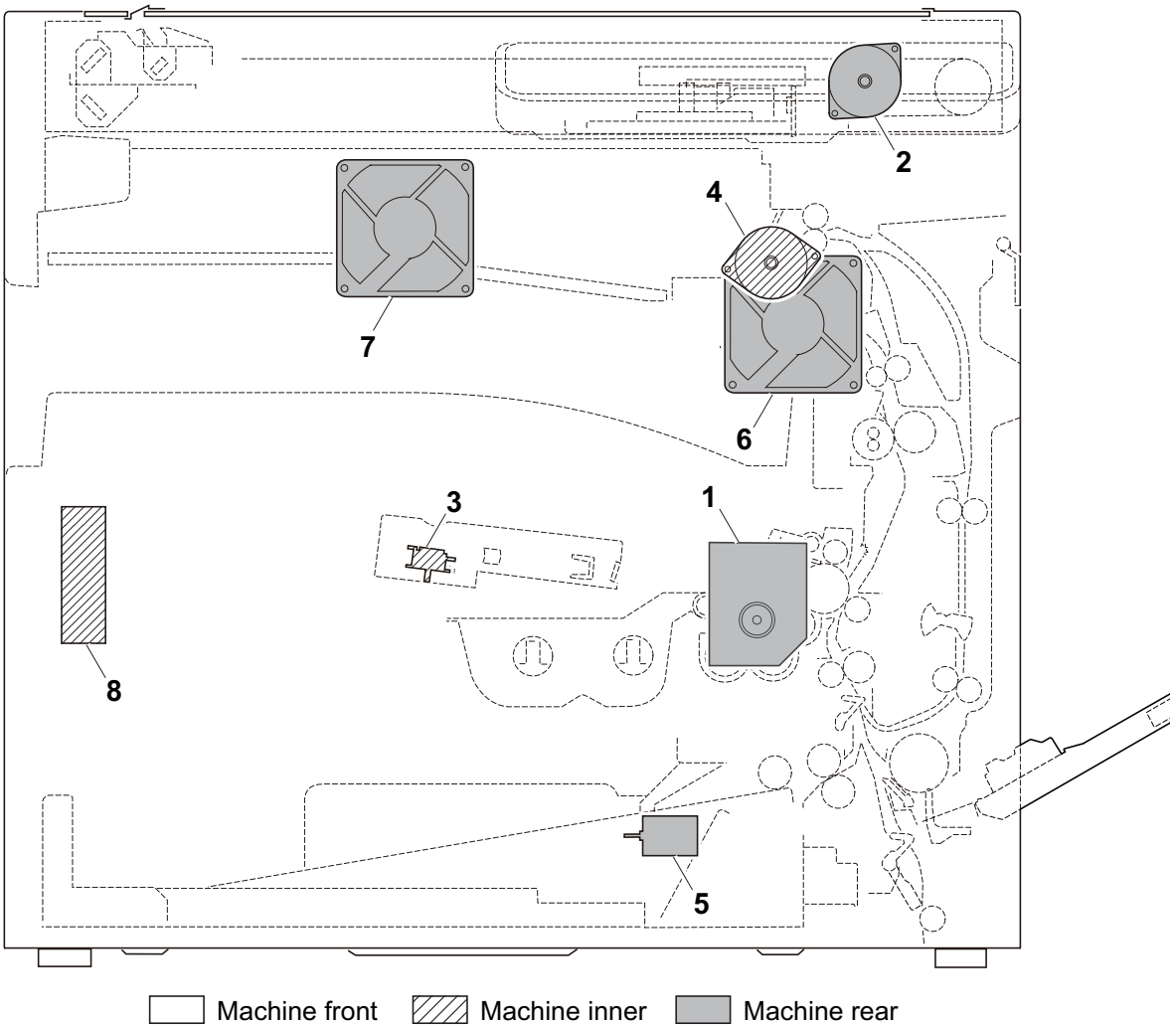

Figure 2-2-3 Motors

1. Main motor (MM)..... Drives the paper feed section and conveying section.
2. ISU motor (ISUM) ..... Drives the ISU.
3. Polygon motor (PM)..... Drives the polygon mirror.
4. Eject motor (EM)..... Drives the fuser section and eject section.
5. Lift motor (LM)..... Operates the bottom plate.
6. Eject fan motor (EFM)..... Cools the fuser and eject sections.
7. Controller fan motor (CONFM)..... Cools the controller section.
8. Power source fan motor (PSFM) ..... Cools the power source PWB.

(4) Others

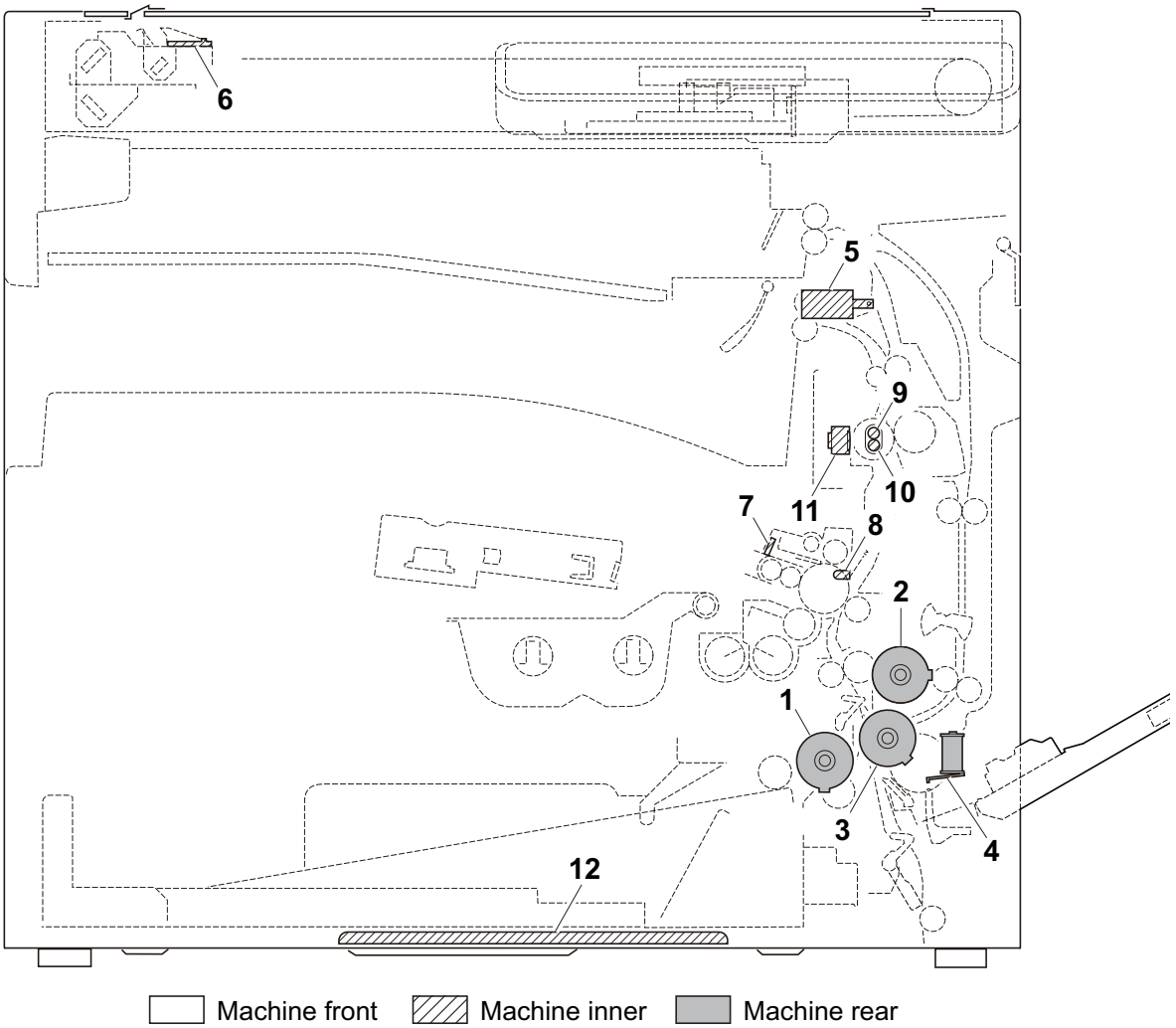

Figure 2-2-4 Others

1. Paper feed clutch (PFCL) ..... Primary paper feed from cassette.
2. Registration clutch (RCL)..... Controls the secondary paper feed.
3. Duplex clutch (DUCL) ..... Controls the drive of the duplex feed roller.
4. MP solenoid (MPSOL) ..... Controls the MP bottom plate.
5. Feedshift solenoid (FSSOL)..... Operates the feedshift guide.
6. Exposure lamp (EL) ..... Exposes originals.
7. Cleaning lamp (CL)..... Eliminates the residual electrostatic charge on the drum.
8. Waste toner lamp (WTL)..... Lights at the brimmer of the toner box.
9. Fuser heater 1 (FH1) ..... Heats the heat roller.
10. Fuser heater 2 (FH2) ..... Heats the heat roller.
11. Fuser thermostat (FTS)..... Prevents overheating of the heat roller.
12. Cassette heater (CH)..... Dehumidifies the cassette section.

(5) Document processor (PWBs and sensors)

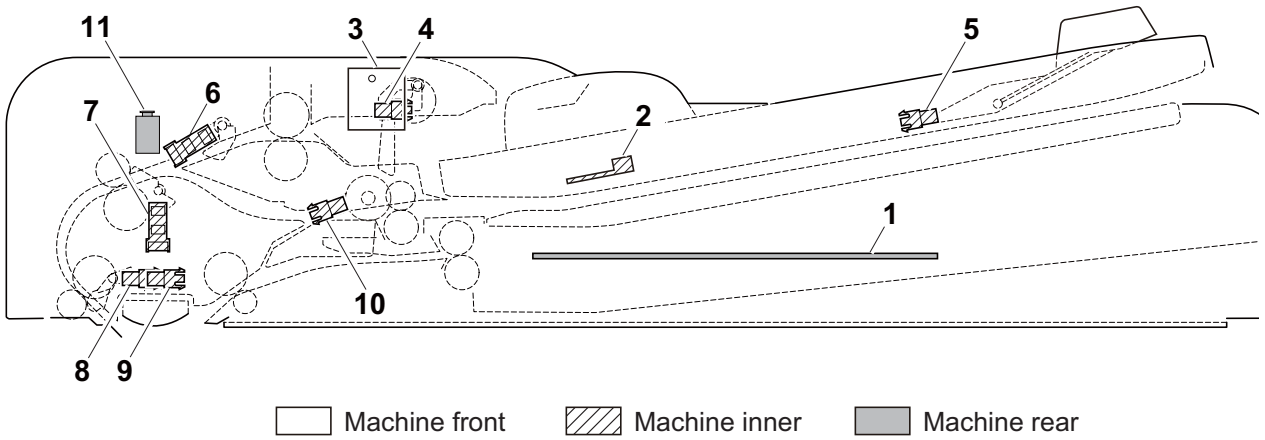

Figure 2-2-5 Document processor

1. DP main PWB (DPMPWB) ..... Consists the motor and clutch driver circuit and wiring relay circuit.
2. DP original size width sensor (DPOWS) ..... Detects the width of the original.
3. DP LED PWB (DPLEDPWB) ..... Display the presence of the original.
4. DP original sensor (DPOS) ..... Detects the presence of an original.
5. DP original size length sensor (DPOLS) ..... Detects the length of the original.
6. DP paper feed sensor (DPPFS)..... Detects a paper misfeed.
7. DP registration sensor (DPRS) ..... Controls the secondary paper feed start timing.
8. DP timing sensor (DPTS)..... Detects the original scanning timing.
9. DP open/close sensor (DPOCS)..... Detects the opening/closing of the DP.
10. DP switchback sensor (DPSBS) ..... Detects the switchback guide in the home position.
11. DP interlock switch (DPILSW) ..... Shuts off 24 V DC power line when the dp top coveris opened.

List of correspondences of PWB names

No.	Name used in service manual	Name used in parts list
1	DP main PWB (DPMPWB)	PARTS PWB DRIVE ASSY SP

(6) Document processor (Motors and clutches)

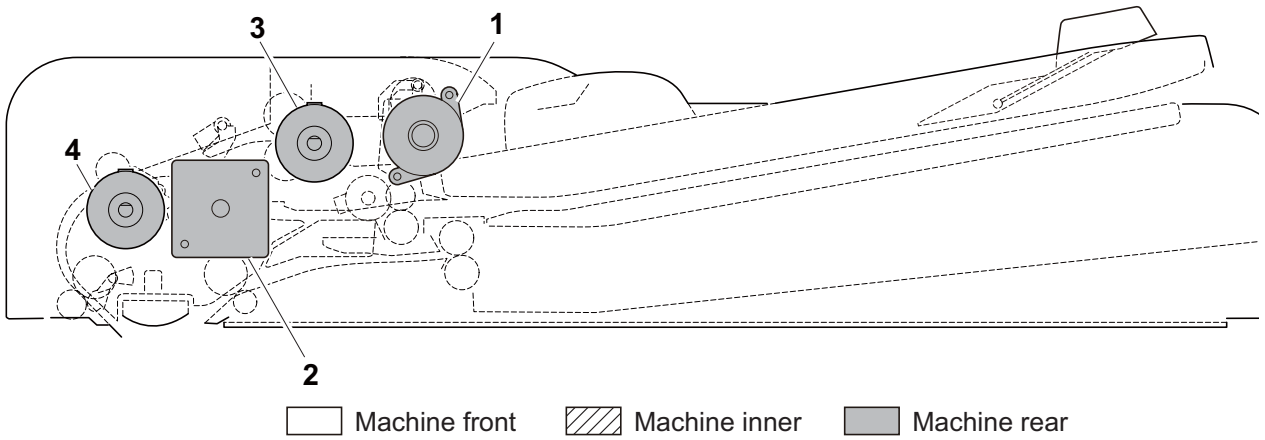

Figure 2-2-6 Document processor

1. DP paper feed motor (DPPFM)..... Drives the original feed section.
2. DP switchback motor (DPSBM)..... Drives the original switchback section.
3. DP paper feed clutch (DPPFCL)..... Controls the drive of the DP forwarding pulley and DP paper feed roller.
4. DP registration clutch (DPRCL) ..... Controls the secondary paper feed.

This page is intentionally left blank.

2-3-1 Main PWB

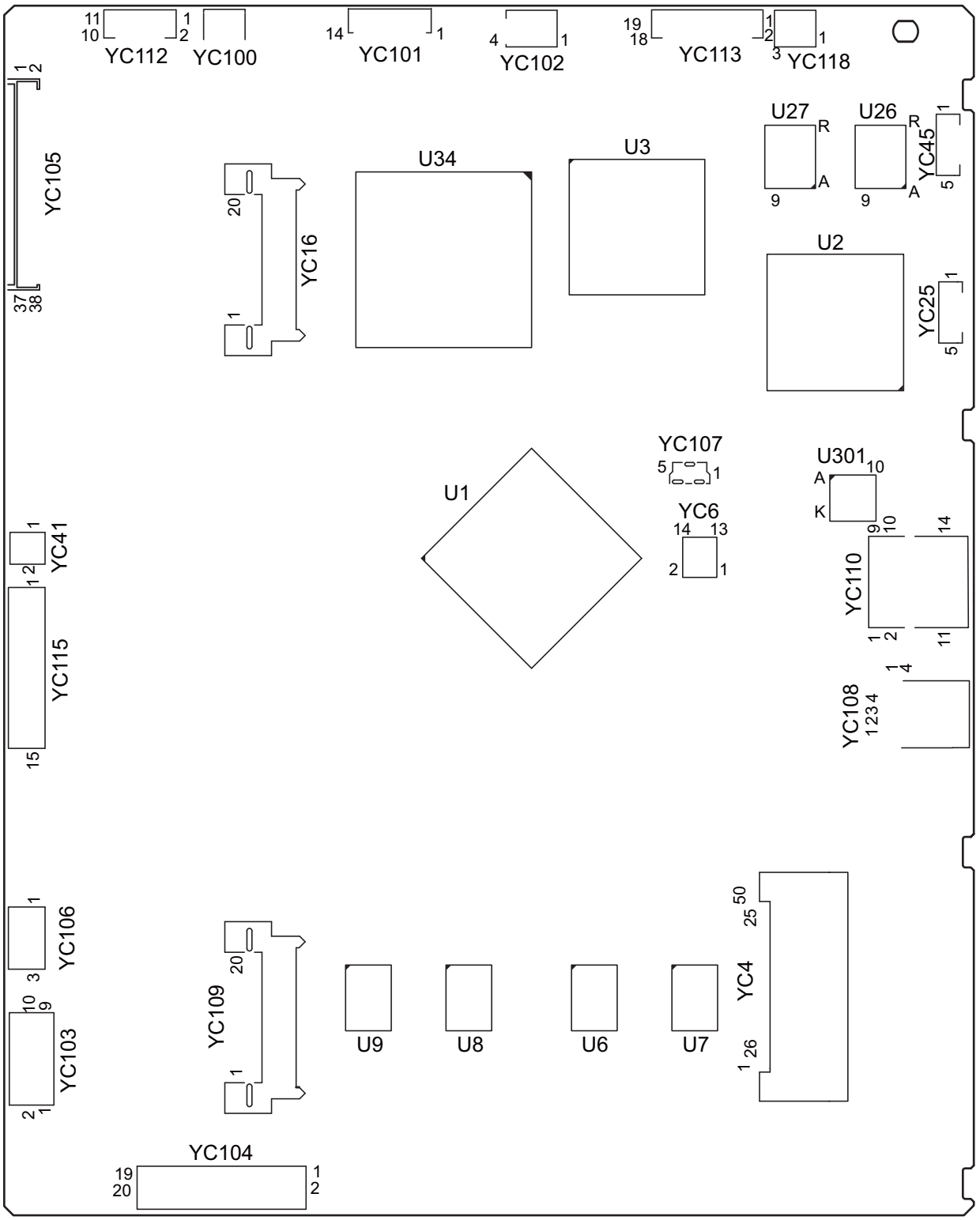

Figure 2-3-1 Main PWB silk-screen diagram

Connector	Pin	Signal	I/O	Voltage	Description
YC100	1	VBUS	O	5 V DC	5 V DC power output
Connected to operathion panel PWB main(USB)	2	DATA-	I/O	LVDS	USB data signal
	3	DATA+	I/O	LVDS	USB data signal
	4	ID	-	-	Not used
	5	GND	-	-	Ground
YC101	1	NC	-	-	Not used
Connected to operation panel PWB main (contorol)	2	GND	-	-	Ground
	3	PANEL_STATUS	I	0/3.3 V DC	Operation panel status signal
	4	INT_POWER KEY	I	0/3.3 V DC	Power key: On/Off
	5	PANEL_RESET	O	0/3.3 V DC	OPPWB-M reset signal
	6	AUDIO	O	Analog	Voice output signal
	7	LIGHTOFF_POWER	O	0/3.3 V DC	Sleep return signal 1
	8	SHUTDOWN	O	0/3.3 V DC	24 V down signal
	9	LED_PROCESSING	O	0/3.3 V DC	Processing LED control signal
	10	LED_ATTENTION	O	0/3.3 V DC	Attention LED control signal
	11	LED_MEMORY	O	0/3.3 V DC	Memory LED control signal
	12	SUSPEND_Power	O	5 V DC	5 V DC power output to OPPWB-M
	13	ENERGY_SAVE	O	0/3.3 V DC	Energy save signal
	14	BEEP_POWERON	O	0/3.3 V DC	Sleep return signal 0
YC102	1	5V2	O	5 V DC	5 V DC power output to OPPWB-M
Connected to operation panel PWB main(power source)	2	5V2	O	5 V DC	5 V DC power output to OPPWB-M
	3	GND	-	-	Ground
	4	GND	-	-	Ground

Connector	Pin	Signal	I/O	Voltage	Description
YC103	1	+3.3V4	O	3.3 V DC	3.3 V DC power output to BDPWB
Connected to APC PWB	2	GND	-	-	Ground
	3	BDN	I	0/3.3 V DC(pulse)	Horizontal synchronizing signal
	4	GND	-	-	Ground
	5	VCONT	O	Analog	Laser control signal
	6	ENBN	O	0/3.3 V DC	Laser output permission signal
	7	SH	O	0/3.3 V DC	Sample/hold signal
	8	VD0P	O	LVDS	Video data signal (+)
	9	VD0N	O	LVDS	Video data signal (-)
	10	+5VIL	O	5 V DC	5 V DC power output to APCPWB (By way of ILSW)
YC105	1	SLEEPOFF	I	0/3.3 V DC	Sleep Off signal
Connected to engine PWB	2	ENG_HLD	O	0/3.3 V DC	Engine hold signal
	3	SCAN_HLD	O	0/3.3 V DC	Scan hold signal
	4	LIGHTSLEEPN	O	0/3.3 V DC	Light sleep shift signal
	5	24V4	I	24 V DC	24 V DC power input from EPWB
	6	24V4	I	24 V DC	24 V DC power input from EPWB
	7	5V4	I	5 V DC	5 V DC power input from EPWB
	8	3.3V0	I	3.3 V DC	3.3 V DC power input from EPWB
	9	3.3V4	I	3.3 V DC	3.3 V DC power input from EPWB
	10	3.3V4	I	3.3 V DC	3.3 V DC power input from EPWB
	11	24VDOWN	I	0/3.3 V DC	24 V down signal
	12	GND	-	-	Ground
	13	GND	-	-	Ground
	14	GND	-	-	Ground
	15	GND	-	-	Ground
	16	GND	-	-	Ground
	17	HYP_SCL	I	0/3.3 V DC(pulse)	Clock signal
	18	HYP_SDA	I	0/3.3 V DC(pulse)	Data signal
	19	HYP_INT	O	0/3.3 V DC	Interrupt sijgnal
	20	AQUA_CLK	I	0/3.3 V DC(pulse)	Clock signal
	21	AQUA_SO	O	0/3.3 V DC(pulse)	Serial communication data signal output
	22	AQUA_SI	I	0/3.3 V DC(pulse)	Serial communication data signal intput
	23	AQUA_SEL	I	0/3.3 V DC	Select signal
	24	AQUA_RDY	O	0/3.3 V DC	Ready signal
	25	PVSYNC	I	0/3.3 V DC(pulse)	Vertical synchronizing signal

Connector	Pin	Signal	I/O	Voltage	Description
YC105	26	OVSYNCMON	O	0/3.3 V DC	Sub-scanning monitor signal
Connected to engine PWB	27	PAGEST	I	0/3.3 V DC	Sub-scanning standard signal
	28	EME_CLK	O	0/3.3 V DC(pulse)	Clock signal
	29	EME_SO	O	0/3.3 V DC(pulse)	Serial communication data signal output
	30	EME_SI	I	0/3.3 V DC(pulse)	Serial communication data signal intput
	31	EME_BSY	I	0/3.3 V DC	Busy signal
	32	EME_DIR	I	0/3.3 V DC	Communication direction change signal
	33	EME_IRN	I	0/3.3 V DC	Interrupt signal
	34	5V4IL	-	DC5 V	5 V DC power input from EPWB
	35	BDN	O	0/3.3 V DC(pulse)	Horizontal synchronizing signal
	36	VCONT	I	Analog	Leser control signal
	37	OUTPEN	I	0/3.3 V DC	Laser output permission signal
	38	N.C.	-	-	Not used
YC106	1	GND	-	-	Ground
Connected to relay PWB	2	RLYREM	O	0/5 V DC	relay drive signal
	3	5V0	I	5 V DC	5 V DC power input from RYPWB
YC107	1	VBUS	O	5 V DC	5 V DC power output
Connected to USB-HOST	2	DATA-	I/O	LVDS	USB data signal
	3	DATA+	I/O	LVDS	USB data signal
	4	ID	-	-	Not used
	5	GND	-	-	Ground
YC112	1	+24V4	O	24 V DC	24 V DC power output to LEDPWB
Connected to exposure lamp (LED PWB)	2	+24V4	O	24 V DC	24 V DC power output to LEDPWB
	3	POW	O	0/3.3 V DC	LED driver: On/Off
	4	PWM	O	0/3.3 V DC	PWM signal
	5	PGND	-	-	Ground
	6	SGND	-	-	Ground
	7	VSET	O	Analog	Analog voltage
	8	SCL	O	0/3.3 V DC(pulse)	Clock signal
	9	SDA	I/O	0/3.3 V DC(pulse)	Data signal
	10	FAIL	I	0/3.3 V DC	Error signal
	11	5V4	O	5 V DC	5 V DC power output to LEDPWB

Connector	Pin	Signal	I/O	Voltage	Description
YC113	1	CCDPWR	O	12 V DC	12 V DC power output to CCDPWB
Connected to CCD PWB	2	CCDPWR	O	12 V DC	12 V DC power output to CCDPWB
	3	+5V4	O	5 V DC	5 V DC power output to CCDPWB
	4	+5V4	O	5 V DC	5 V DC power output to CCDPWB
	5	+5V4	O	5 V DC	5 V DC power output to CCDPWB
	6	+3.3V4	O	3.3 V DC	3.3 V DC power output to CCDPWB
	7	CCD_SH	O	0/3.3 V DC	Shift gate signal
	8	GND	-	-	Ground
	9	RS	O	0/3.3 V DC	Reset signal
	10	GND	-	-	Ground
	11	CP	O	0/3.3 V DC	Clamping signal
	12	GND	-	-	Ground
	13	CCDCLK1	O	0/3.3 V DC(pulse)	Clock signal
	14	GND	-	-	Ground
	15	OS1(B)	I	Analog	CCD Image output signal(B)
	16	GND	-	-	Ground
	17	OS2(G)	I	Analog	CCD Image output signal(G)
	18	GND	-	-	Ground
	19	OS3(R)	I	Analog	CCD Image output signal(R)
YC115	1	DEEPSLEEPN	O	0/3.3 V DC	Sleep signal: On/Off
Connected to power source PWB	2	GND	-	-	Ground
	3	GND	-	-	Ground
	4	GND	-	-	Ground
	5	GND	-	-	Ground
	6	GND	-	-	Ground
	7	GND	-	-	Ground
	8	GND	-	-	Ground
	9	5V2	I	5 V DC	5 V DC power input from PSPWB
	10	5V2	I	5 V DC	5 V DC power input from PSPWB
	11	5V2	I	5 V DC	5 V DC power input from PSPWB
	12	5V2	I	5 V DC	5 V DC power input from PSPWB
	13	5V2	I	5 V DC	5 V DC power input from PSPWB
	14	5V2	I	5 V DC	5 V DC power input from PSPWB
	15	5V2	I	5 V DC	5 V DC power input from PSPWB

Connector	Pin	Signal	I/O	Voltage	Description
YC118	1	AUTODOWN	O	0/3.3 V DC	Auto down signal
Connected to power source PWB sub	2	GND	-	-	Ground
	3	5V0	I	5 V DC	5 V DC power input from PSPWB-S
YC41	1	+24V1	O	24 V DC	24 V DC power output to CONFM
Connected to controller fan motor	2	CONTFANDRN	O	0/24 V DC	CONFM: On/Off
	3	N.C.	-	-	Not used

2-3-2 Engine PWB

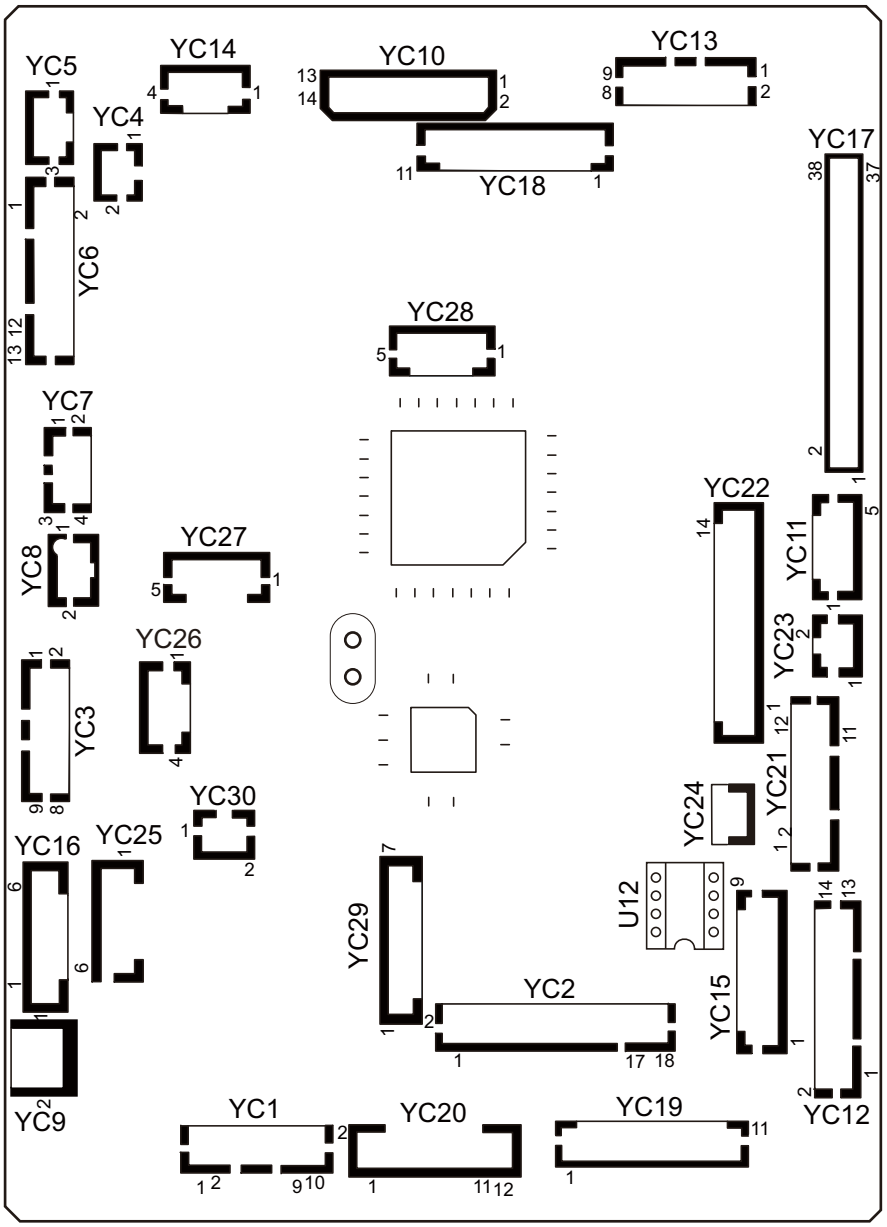

Figure 2-3-2 Engine PWB silk-screen diagram

Connector	Pin	Signal	I/O	Voltage	Description
YC1	1	FEED_CL_REM	O	0/24 V DC	PFCL: On/Off
Connected to paper feed clutch, registration clutch, duplex clutch, MP solenoid and lift motor	2	24V4	O	24 V DC	24V DC power output to PFCL
	3	REG_CL_REM	O	0/24 V DC	RCL: On/Off
	4	24V4	O	24 V DC	24V DC power output to RCL
	5	DU_CL_REM	O	0/24 V DC	DUCL: On/Off
	6	24V4	O	24 V DC	24V DC power output to DUCL
	7	24V4	O	24 V DC	24V DC power output to MPSOL
	8	MPF_SOL_REM	O	0/24 V DC	MPSOL: On/Off
	9	LMOT_REM	O	0/24 V DC	LM: On/Off
	10	24V4	O	24 V DC	24V DC power output to LM
YC2	1	3.3VLED	O	3.3V DC	3.3V DC power output to LS
Connected to lift sensor, registration sensor, paper sensor1, 2, paper size length switch and paper size width switch	2	GND	-	-	Ground
	3	LIFTFULL	I	0/3.3 V DC	LS: On/Off
	4	3.3VLED	O	3.3V DC	3.3V DC power output to RS
	5	GND	-	-	Ground
	6	RESIST	I	0/3.3 V DC	RS: On/Off
	7	3.3VLED	O	3.3V DC	3.3V DC power output to PS1
	8	GND	-	-	Ground
	9	PAPEMP1	I	0/3.3 V DC	PS1: On/Off
	10	3.3VLED	O	3.3V DC	3.3V DC power output to PS2
	11	GND	-	-	Ground
	12	PAPEMP2	I	0/3.3 V DC	PS2: On/Off
	13	PAPLSIZE3	I	0/3.3 V DC	PLSW: On/Off
	14	PAPLSIZE2	I	0/3.3 V DC	PLSW: On/Off
	15	GND	-	-	Ground
	16	PAPLSIZE1	I	0/3.3 V DC	PLSW: On/Off
	17	PAPWSIZE1	I	0/3.3 V DC	PWSW: On/Off
	18	GND	-	-	Ground

Connector	Pin	Signal	I/O	Voltage	Description
YC3	1	3.3VLED	O	3.3 V DC	3.3 V DC power output to DUS
Connected to duplex sensor, MP paper sensor and feed sensor	2	GND	-	-	Ground
	3	DU_REG	I	0/3.3 V DC	DUS: On/Off
	4	3.3VLEDDS	O	3.3 V DC	3.3 V DC power output to MPPS
	5	GND	-	-	Ground
	6	MPF_EMPTY	I	0/3.3 V DC	MPPS: On/Off
	7	3.3VLED	O	3.3 V DC	3.3 V DC power output to FS
	8	GND	-	-	Ground
	9	PAPER_JAM	I	0/3.3 V DC	FS: On/Off
YC4	1	24V4	O	24 V DC	24 V DC power output to EFM
Connected to eject fan motor	2	EJECT_FAN_REM	O	0/24 V DC	EFM: On/Off
YC5	1	EJE_SOL_PUL	O	0/24 V DC	FSSOL: On(Pressurizing)/Off
Connected to feedshift solenoid	2	+24V4	O	24 V DC	24 V DC power output to FSSOL
	3	EJE_SOL_RETURN	O	0/24 V DC	FSSOL: On(Release)/Off
YC6	1	EJECT A	O	0/24 V DC(pulse)	EM drive control signal
Connected to eject motor,job paper full sensor, paper full sensor and eject sensor	2	EJECT B	O	0/24 V DC(pulse)	EM drive control signal
	3	EJECT /A	O	0/24 V DC(pulse)	EM drive control signal
	4	EJECT /B	O	0/24 V DC(pulse)	EM drive control signal
	5	3.3VLED	O	3.3 V DC	3.3 V DC power output to JPFS
	6	GND	-	-	Ground
	7	EJE_FULL_UPPER	I	0/3.3 V DC	JPFS: On/Off
	8	3.3VLED	O	3.3 V DC	3.3 V DC power output to PFS
	9	GND	-	-	Ground
	10	EJE_FULL_DOWNE	I	0/3.3 V DC	PFS: On/Off
	11	3.3VLED	O	3.3 V DC	3.3 V DC power output to ES
	12	GND	-	-	Ground
	13	FUSER_JAM	I	0/3.3 V DC	ES: On/Off
YC7	1	3.3V4	O	3.3 V DC	3.3 V DC power output to FTH
Connected to fuser thermistor	2	GND	-	-	Ground
	3	TH1	I	Analog	FTH Detection voltage
	4	TH2	I	Analog	FTH Detection voltage

Connector	Pin	Signal	I/O	Voltage	Description
YC8	1	BRSET	I	0/3.3 V DC	BRDSW: On/Off
Connected to bridge detection switch	2	GND	-	-	Ground
YC9	1	24VIL1	O	24 V DC	24 V DC power output to RCSW (By way of FCSW)
Connected to right cover switch	2	24VIL2	I	24 V DC	24 V DC power input from RCSW
YC10	1	24VIL	O	24 V DC	24 V DC poiwer output to HVPWB
Connected to high voltage PWB	2	24VIL	O	24 V DC	24 V DC power output to HVPWB
	3	MC_CLK	O	0/3.3 V DC(pulse)	Charging AC clock signals
	4	MC_ACCNT	O	Analog	Charging AC output control signal
	5	MC_DCCNT	O	Analog	Charging DC output control signal
	6	MC_ISENS	I	Analog	Charging output current detection signal
	7	DC_REM	O	0/3.3 V DC	Charging DC/Transfer DC output : On/Off
	8	TRA_CNT	O	Analog	Transfer DC output control signal
	9	SEP_REM	O	0/3.3 V DC	Separation DC output: On/Off
	10	SEP_SEL	O	Analog	Separation DC output shift signal
	11	DLP_CLK	O	0/3.3 V DC(pulse)	Developing AC clock signal
	12	DLP_CNT	O	Analog	Developing DC output shift signal
	13	GND	-	-	Ground
	14	GND	-	-	Ground
YC11	1	24V4	O	24 V DC	24 V DC power output to PM
Connected to polygon motor	2	GND	-	-	Ground
	3	POL_REM	O	0/3.3 V DC	PM: On/Off
	4	POL_READY	I	0/3.3 V DC	PM ready signal
	5	POL_CLK	O	0/3.3 V DC(pulse)	PM clock

Connector	Pin	Signal	I/O	Voltage	Description
YC12	1	GND	-	-	Ground
Connected to developing relay PWB,RFID PWB,toner sensor,toner container lock sensor and toner container switch	2	DLP_SDA	I/O	0/3.3 V DC(pulse)	DEVPWB EEPROM data signal
	3	DLP_SCL	O	0/3.3 V DC(pulse)	DEVPWB EEPROM clock signal
	4	3.3V4	O	3.3 V DC	3.3 V DC power output to DEVPWB
	5	GND	-	-	Ground
	6	RFID_SDA	I/O	0/3.3 V DC(pulse)	RFPWB EEPROM data signal
	7	RFID_SCL	O	0/3.3 V DC(pulse)	RFPWB EEPROM clock signal
	8	3.3V4	O	3.3 V DC	3.3 V DC power output to RFPWB
	9	3.3V4	O	3.3 V DC	3.3 V DC power output to TS
	10	TON_EMP	I	0/3.3 V DC	TS: On/Off
	11	GND	-	-	Ground
	12	3.3VLED	O	3.3 V DC	3.3 V DC power output to TCLS
	13	GND	-	-	Ground
	14	CON_LOCK	I	0/3.3 V DC	TCLS: On/Off
	15	TCONSET	I	0/3.3 V DC	TCSW: On/Off
	16	GND	-	-	Ground
YC13	1	3.3VLED	O	3.3 V DC	3.3 V DC power output to HPS
Connected to home position sensor,original detection switch and original size sensor	2	GND	-	-	Ground
	3	SCA_HP	I	0/3.3 V DC	HPS: On/Off
	4	3.3VLED	O	3.3 V DC	3.3 V DC power output to ODSW
	5	GND	-	-	Ground
	6	SCA_COVER	I	0/3.3 V DC	ODSW: On/Off
	7	GND	-	-	Ground
	8	SCA_SIZE	O	0/3.3 V DC	OSS: On/Off
	9	5V4	I	5 V DC	5 V DC power output to OSS
YC14	1	SCANNER B1	O	0/24 V DC(pulse)	ISUM drive control signal
Connected to ISU motor	2	SCANNER A2	O	0/24 V DC(pulse)	ISUM drive control signal
	3	SCANNER B2	O	0/24 V DC(pulse)	ISUM drive control signal
	4	SCANNER A1	O	0/24 V DC(pulse)	ISUM drive control signal

Connector	Pin	Signal	I/O	Voltage	Description
YC15	1	3.3V4	O	3.3V DC	3.3V DC power output to DRPWB
Connected to drum relay PWB	2	DRUM_SDA	I/O	0/3.3 V DC(pulse)	DRPWB EEPROM data signal
	3	DRUM_SCL	O	0/3.3 V DC(pulse)	DRPWB EEPROM clock signal
	4	GND	-	-	Ground
	5	WT_LED	O	0/3.3 V DC	WTL: On/Off
	6	WT_SENS	I	Analog	WTS detection signal
	7	3.3VLED	O	3.3V DC	3.3V DC power output to WTS
	8	ERASE	O	0/24 V DC	CL: On/Off
	9	24V4	O	24 V DC	24 V DC power output to CL
YC16	1	MAIN_DIR	O	0/3.3 V DC	MM drive shift signal
Connected to main motor	2	MAIN_READY	I	0/3.3 V DC	MM ready signal
	3	MAIN_CLK	O	0/3.3 V DC(pulse)	MM clock signal
	4	MAIN_REM	O	0/24 V DC	MM: On/Off
	5	GND	-	-	Ground
	6	24VIL2	O	24 V DC	24V DC power output to MM
YC18	1	GND	-	-	Ground
Connected to DP main PWB	2	GND	-	-	Ground
	3	24V4	O	24 V DC	24V DC power output to DP
	4	24V4	O	24 V DC	24V DC power output to DP
	5	DP_CLK	O	0/3.3 V DC(pulse)	DP clock signal
	6	DP_SO	O	0/3.3 V DC(pulse)	Serial communication data signal
	7	DP_SEL	O	0/3.3 V DC	DP select signal
	8	DP_SI	I	0/3.3 V DC(pulse)	Serial communication data signal
	9	DP_RDY	I	0/3.3 V DC	DP ready signal
	10	DP_TMG	I	0/3.3 V DC	DPTS: On/Off
	11	DP_OPEN	I	0/3.3 V DC	DPOCS: On/Off

Connector	Pin	Signal	I/O	Voltage	Description
YC19	1	EH_CLK	O	0/3.3 V DC(pulse)	Document finisher clock signal
Connected to document finsher	2	EH_SI	I	0/3.3 V DC(pulse)	Serial communication data signal
	3	EH_SO	O	0/3.3 V DC(pulse)	Serial communication data signal
	4	BR_SEL	O	0/3.3 V DC	Bridge unit select signal
	5	DF_SEL	O	0/3.3 V DC	Document finisher select signal
	6	DF_RDY	I	0/3.3 V DC	Document finisher ready signal
	7	DF_SET	O	0/3.3 V DC	Document finisher set signal
	8	3.3V4	O	3.3 V DC	3.3 V DC power output to DF
	9	3.3V4	O	3.3 V DC	3.3 V DC power output to DF
	10	GND	-	-	Ground
	11	GND	-	-	Ground
YC20	1	EH_CLK	O	0/3.3 V DC(pulse)	Paper feeder clock signal
Connected to paper feeder	2	EH_SI	I	0/3.3 V DC(pulse)	Serial communication data signal
	3	EH_SO	O	0/3.3 V DC(pulse)	Serial communication data signal
	4	PF_SEL	O	0/3.3 V DC	Paper feeder select signal
	5	PF_RDY	I	0/3.3 V DC	Paper feeder ready signal
	6	PF_SET	O	0/3.3 V DC	Paper feeder set signal
	7	PF_PAUSE	O	0/3.3 V DC	Paper feeder control signal
	8	24V4	O	24 V DC	24 V DC power output to paper feeder
	9	3.3V0	O	3.3 V DC	3.3 V DC power output to paper feeder
	10	3.3V4	O	3.3 V DC	3.3 V DC power output to paper feeder
	11	GND	-	-	Ground
	12	GND	-	-	Ground
YC21	1	GND	-	-	Ground
Connected to power source PWB and temperature sensor	2	HUM_DATA	I	Analog	TEMS detection voltage(Humidity)
	3	HUM_CLK2	O	0/3.3 V DC(pulse)	TEMS clock sijgnal
	4	HUM_CLK1	O	0/3.3 V DC(pulse)	TEMS clock sijgnal
	5	TEM_DATA	I	Analog	TEMS detection voltage(Temperature)
	6	3.3V4	O	3.3 V DC	3.3 V DC power output to TEMS
	7	ILVCC	O	3.3 V DC	3.3 V DC power output to PSPWB
	8	CHREM	O	0/3.3 V DC	CH: On/Off
	9	SHREM	O	0/3.3 V DC	FH2: On/Off
	10	MHREM	O	0/3.3 V DC	FH1: On/Off
	11	RELAYREM	O	0/3.3 V DC	Power relay signal: On/Off
	12	ZCROSS	I	0/3.3 V DC(pulse)	Zero-cross signal
	13	SELECT	O	0/3.3 V DC	Destination selection signal

Connector	Pin	Signal	I/O	Voltage	Description
YC22	1	24VIL1	O	24 V DC	24 V DC power input from PSPWB
Connected to power source PWB and power source fan motor	2	24VIL1	O	24 V DC	24 V DC power input from PSPWB
	3	24VIL1	O	24 V DC	24 V DC power input from PSPWB
	4	GND	-	-	Ground
	5	GND	-	-	Ground
	6	GND	-	-	Ground
	7	GND	-	-	Ground
	8	24VIL2	O	24 V DC	24V DC power input from PSPWB
	9	GND	-	-	Ground
	10	GND	-	-	Ground
	11	24V2	O	24 V DC	24 V DC power input from PSPWB
	12	24V2	O	24 V DC	24 V DC power input from PSPWB
	13	24V4	O	24 V DC	24 V DC power output to PSFM
	14	LVU_FAN_RE	O	0/24 V DC	24 V DC power output to PSFM: On/Off

2-3-3 Power source PWB

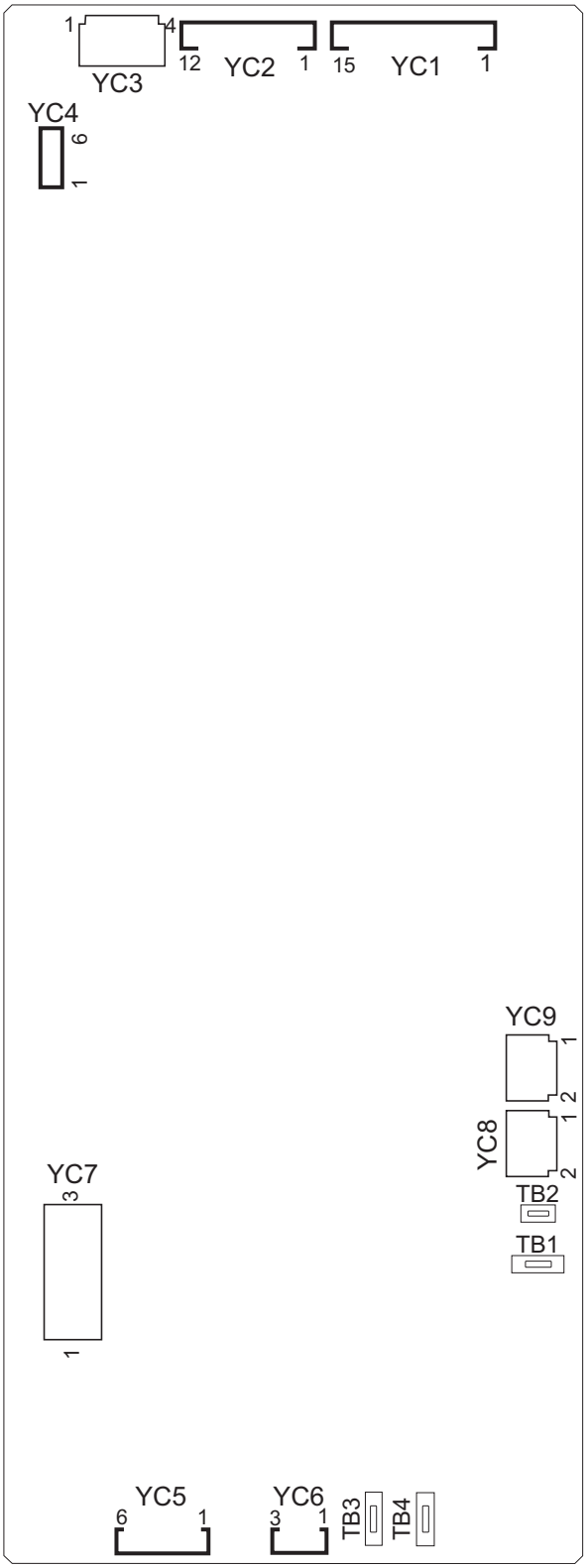

Figure 2-3-3 Main PWB silk-screen diagram

Connector	Pin	Signal	I/O	Voltage	Description
TB	TB1	LIVE	I	120 V AC 220-240 V AC	AC power input
Connected to AC inlet and main power switch	TB2	NEUTRAL	I	120 V AC 220-240 V AC	AC power input
	TB3	LIVE(SW)	O	120 V AC 220-240 V AC	AC power output to MSW
	TB4	LIVE(SW)	I	120 V AC 220-240 V AC	AC power input from MSW
YC1	1	+5V2	O	5 V DC	5 V DC power output to MPWB
Connected to main PWB	2	+5V2	O	5 V DC	5 V DC power output to MPWB
	3	+5V2	O	5 V DC	5 V DC power output to MPWB
	4	+5V2	O	5 V DC	5 V DC power output to MPWB
	5	+5V2	O	5 V DC	5 V DC power output to MPWB
	6	+5V2	O	5 V DC	5 V DC power output to MPWB
	7	+5V2	O	5 V DC	5 V DC power output to MPWB
	8	GND	-	-	Ground
	9	GND	-	-	Ground
	10	GND	-	-	Ground
	11	GND	-	-	Ground
	12	GND	-	-	Ground
	13	GND	-	-	Ground
	14	GND	-	-	Ground
	15	SLEEP	I	0/3.3 V DC	Sleep signal: On/Off
YC2	1	+24V2	O	24 V DC	24 V DC power output to EPWB
Connected to engine PWB	2	+24V2	O	24 V DC	24 V DC power output to EPWB
	3	GND	-	-	Ground
	4	GND	-	-	Ground
	5	+24VIL2	O	24 V DC	24 V DC power output to EPWB
	6	GND	-	-	Ground
	7	GND	-	-	Ground
	8	GND	-	-	Ground
	9	GND	-	-	Ground
	10	+24VIL1	O	24 V DC	24 V DC power output to EPWB
	11	+24VIL1	O	24 V DC	24 V DC power output to EPWB
	12	+24VIL1	O	24 V DC	24 V DC power output to EPWB

Connector	Pin	Signal	I/O	Voltage	Description
YC3	1	ILVCC	O	3.3 V DC	3.3 V DC power output to FCSW
Connected to front cover switch	2	24V2	I	24 V DC	24 V DC power input from FCSW
	3	NC	-	-	Not used
	4	24VIL1	O	24 V DC	24 V DC power output to FCSW
YC4	1	SELECT	I	0/3.3 V DC	Destination selection signal
Connected to engine PWB	2	ZCROSS	O	0/3.3 V DC(pulse)	Zero-cross signal
	3	RELAYREM	I	0/3.3 V DC	Power relay signal: On/Off
	4	MHREM	I	0/3.3 V DC	FH1: On/Off
	5	SHREM	I	0/3.3 V DC	FH2: On/Off
	6	CHREM	I	0/3.3 V DC	CH: On/Off
	7	ILVCC	I	3.3 V DC	3.3 V DC power input from MPWB
YC5	1	LIVE	O	120 V AC 220-240 V AC	AC power output to PFCH
Connected to paper feeder and cassette heater	2	LIVE	O	120 V AC 220-240 V AC	AC power output to CH
	3	NC	-	-	Not used
	4	NC	-	-	Not used
	5	NEUTRAL	O	120 V AC 220-240 V AC	AC power output to PFCH
	6	NEUTRAL	O	120 V AC 220-240 V AC	AC power output to CH
YC6	1	CH_SW	O	120 V AC 220-240 V AC	AC power output to CHSW
Connected to cassette heater switch	2	NC	-	-	Not used
	3	CH_COM	I	120 V AC 220-240 V AC	AC power input from CHSW
YC7	1	MHEATER	O	0/120 V AC 0/220-240 V AC	FH1: On/Off
Connected to fuser unit	2	SHEATER	O	0/120 V AC 0/220-240 V AC	FH2: On/Off
	3	H_LIVE	O	100V AC	AC power output to FH1,2

Connector	Pin	Signal	I/O	Voltage	Description
YC8	1	LIVE	O	120 V AC 220-240 V AC	AC power output
Connected to AC outlet	2	NEUTRAL	O	120 V AC 220-240 V AC	AC power output
YC9	1	LIVE	O	120 V AC 220-240 V AC	AC power output
Connected to power source PWB sub	2	NEUTRAL	O	120 V AC 220-240 V AC	AC power output
YC10	1	AC_IN	I	120 V AC 220-240 V AC	AC power input
Connected to relay PWB	2	AC_OUT	O	120 V AC 220-240 V AC	AC power output

2-3-4 Operation panel PWB main

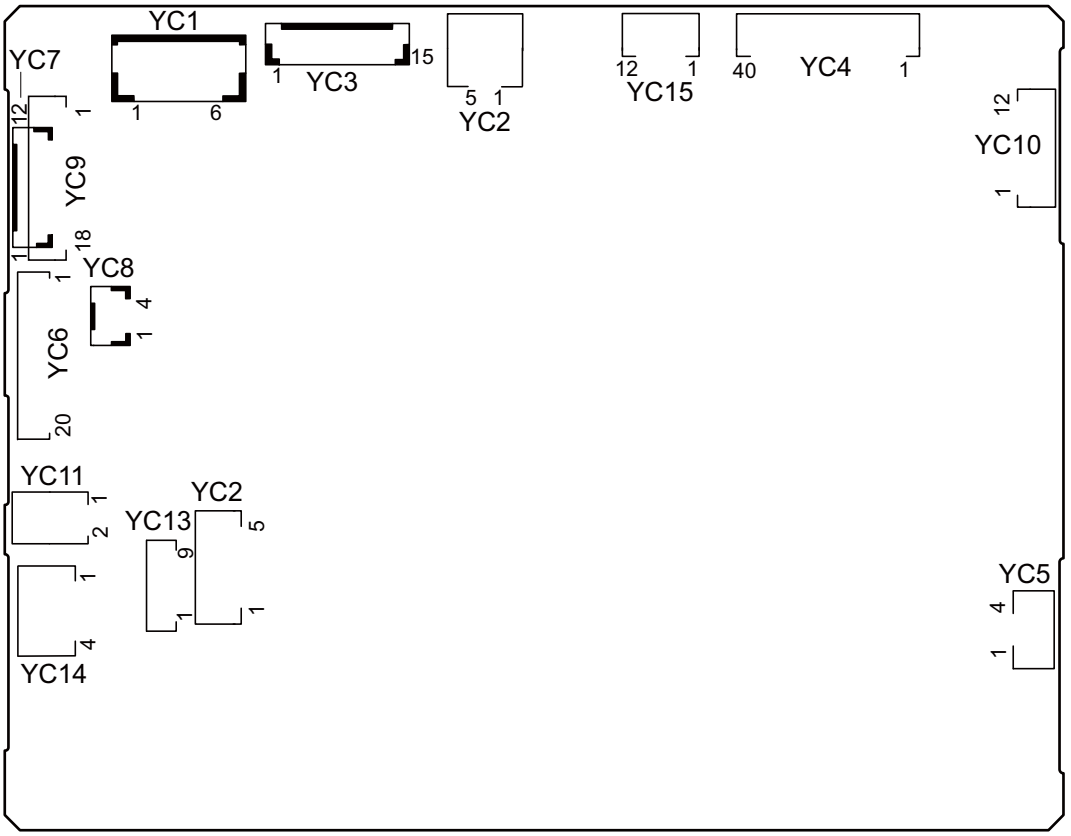

Figure 2-3-4 Operation panel PWB main silk-screen diagram

Connector	Pin	Signal	I/O	Voltage	Description
YC1	1	5V2	I	5 V DC	5 V DC power intput from MPWB
Connected to main PWB	2	5V2	I	5 V DC	5 V DC power input from MPWB
	3	GND	-	-	Ground
	4	GND	-	-	Ground
YC2	1	VBUS	I	5 V DC	5 V DC power input
Connected to main PWB	2	DN	I/O	LVDS	USB data signal
	3	DP	I/O	LVDS	USB data signal
	4	ID	-	-	Not used
	5	GND	-	-	Ground
YC3	1	GND	-	-	Ground
Connected to main PWB	2	SECOND_TRAY_S	I	0/3.3 V DC	JEPS: On/Off
	3	BEEP_POWERON	I	0/3.3 V DC	Sleep return signal 0
	4	ENERGY_SAVE	I	0/3.3 V DC	Energy save signal
	5	SUSPEND_Power	I	3.3V DC	3.3 V DC power input from MPWB
	6	LED_MEMORY	I	0/3.3 V DC	Memory LED control signal
	7	LED_ATTENTION	I	0/3.3 V DC	Attention LED control signal
	8	LED_PROCESSING	I	0/3.3 V DC	Processing LED control signal
	9	SHUTDOWN	I	0/3.3 V DC	24 V down signal
	10	LIGHTOFF_POWER	I	0/3.3 V DC	Sleep return signal 1
	11	AUDIO	I	Analog	Voice output signal
	12	PANEL_RESET	I	0/3.3 V DC	Reset signal
	13	INT_POWERKEY	O	0/3.3 V DC	Power key: On/Off
	14	PANEL_STATUS	O	0/3.3 V DC	Operation panel status signal
	15	GND	-	-	Ground

Connector	Pin	Signal	I/O	Voltage	Description
YC4	1	GND	-	-	Ground
Connected to LCD relay PWB	2	GND	-	-	Ground
	3	CK	O	0/3.3 V DC(pulse)	Clock signal
	4	GND	-	-	Ground
	5	GND	-	-	Ground
	6	SC	O	0/3.3 V DC	LCD Control signal
	7	R0	O	0/3.3 V DC	LCD Control signal
	8	R1	O	0/3.3 V DC	LCD Control signal
	9	R2	O	0/3.3 V DC	LCD Control signal
	10	GND	-	-	Ground
	11	R3	O	0/3.3 V DC	LCD Control signal
	12	R4	O	0/3.3 V DC	LCD Control signal
	13	R5	O	0/3.3 V DC	LCD Control signal
	14	GND	-	-	Ground
	15	G1	O	0/3.3 V DC	LCD Control signal
	16	G1	O	0/3.3 V DC	LCD Control signal
	17	G2	O	0/3.3 V DC	LCD Control signal
	18	GND	-	-	Ground
	19	G3	O	0/3.3 V DC	LCD Control signal
	20	G4	O	0/3.3 V DC	LCD Control signal
	21	G5	O	0/3.3 V DC	LCD Control signal
	22	GND	-	-	Ground
	23	B0	O	0/3.3 V DC	LCD Control signal
	24	B1	O	0/3.3 V DC	LCD Control signal
	25	B2	O	0/3.3 V DC	LCD Control signal
	26	GND	-	-	Ground
	27	B3	O	0/3.3 V DC	LCD Control signal
	28	B4	O	0/3.3 V DC	LCD Control signal
	29	B5	O	0/3.3 V DC	LCD Control signal
	30	GND	-	-	Ground
	31	H_SYNC	O	0/3.3 V DC(pulse)	Horizontal synchronizing signal
	32	GND	-	-	Ground
	33	V_SYNC	O	0/3.3 V DC(pulse)	Vertical synchronizing signal
	34	GND	-	-	Ground
	35	ENB	O	0/3.3 V DC	LCD enable signal
	36	CM	O	0/3.3 V DC	LCD mode switch signal
	37	3.3V	O	3.3V DC	3.3 V DC power output to LCDRPWB

Connector	Pin	Signal	I/O	Voltage	Description
YC4	38	3.3V	O	3.3 V DC	3.3 V DC power output to LCDRPWB
Connected to LCD relay PWB	39	3.3V	O	3.3 V DC	3.3 V DC power output to LCDRPWB
	40	3.3V	O	3.3 V DC	3.3 V DC power output to LCDRPWB
YC9	1	A_LED	O	0/3.3 V DC	Memory LED control signal
Connected to operation panel PWB left	2	M_LED	O	0/3.3 V DC	Attention LED control signal
	3	P_LED	O	0/3.3 V DC	Processing LED control signal
	4	KEY4	I	0/3.3 V DC(pulse)	Operation panel key scan return signal 4
	5	INT_POWER KEY_N	O	0/5 V DC	Power key: On/Off
	6	KEY3	I	0/3.3 V DC(pulse)	Operation panel key scan return signal 3
	7	KEY2	I	0/3.3 V DC(pulse)	Operation panel key scan return signal 2
	8	KEY1	I	0/3.3 V DC(pulse)	Operation panel key scan return signal 1
	9	LED1	O	0/3.3 V DC(pulse)	Operation panel LED display drive signal 1
	10	3.3V0	O	3.3V DC	3.3 V DC power output to OPPWB-L
	11	LED0	O	0/3.3 V DC(pulse)	Operation panel LED display drive signal 0
	12	KEY0	I	0/3.3 V DC(pulse)	Operation panel key scan return signal 0
	13	SCAN4	O	0/3.3 V DC(pulse)	Scan signal 4
	14	SCAN3	O	0/3.3 V DC(pulse)	Scan signal 3
	15	SCAN2	O	0/3.3 V DC(pulse)	Scan signal 2
	16	SCAN1	O	0/3.3 V DC(pulse)	Scan signal 1
	17	SCAN0	O	0/3.3 V DC(pulse)	Scan signal 0
	18	GND	-	-	Ground

Connector	Pin	Signal	I/O	Voltage	Description
YC10	1	S_LED	O	0/3.3 V DC	Memory LED contorol signal
Connected to operation panel PWB right	2	LED4	O	0/3.3 V DC(pulse)	Operation panel LED display drive signal 4
	3	LED2	O	0/3.3 V DC(pulse)	Operation panel LED display drive signal 2
	4	KEY5	I	0/3.3 V DC(pulse)	Operation panel key scan return signal 5
	5	SCAN3	O	0/3.3 V DC(pulse)	Scan signal 3
	6	SCAN2	O	0/3.3 V DC(pulse)	Scan signal 2
	7	SCAN1	O	0/3.3 V DC(pulse)	Scan signal 1
	8	KEY7	I	0/3.3 V DC(pulse)	Operation panel key scan return signal 7
	9	LED3	O	0/3.3 V DC(pulse)	Operation panel LED display drive signal 3
	10	KEY6	I	0/3.3 V DC(pulse)	Operation panel key scan return signal 6
	11	SCAN0	O	0/3.3 V DC(pulse)	Scan signal 0
	12	GND	-	-	Ground
YC15	1	GND	-	-	Ground
Connected to LCD relay PWB	2	SCK	O	0/3.3 V DC(pulse)	Clock signal
	3	SDI	O	0/3.3 V DC(pulse)	Serial communication data signal
	4	SPC_CS1N	O	0/3.3 V DC	LCD control signal
	5	SHUT	O	0/3.3 V DC	LCD control signal
	6	LCD_RESB	O	0/3.3 V DC	LCD control signal
	7	Y1(T)	I	Analog	Touch panel Y+Positional signal
	8	X2(L)	I	Analog	Touch panel X+Positional signal
	9	Y2(B)	I	Analog	Touch panel Y-Positional signal
	10	X1(R)	I	Analog	Touch panel X-Positional signal
	11	LED_A(+)	O	0/3.3 V DC	LED control signal
	12	LED_C(-)	I	0/3.3 V DC	LED control signal

2-3-5 DP main PWB (Model with document processor as standard)

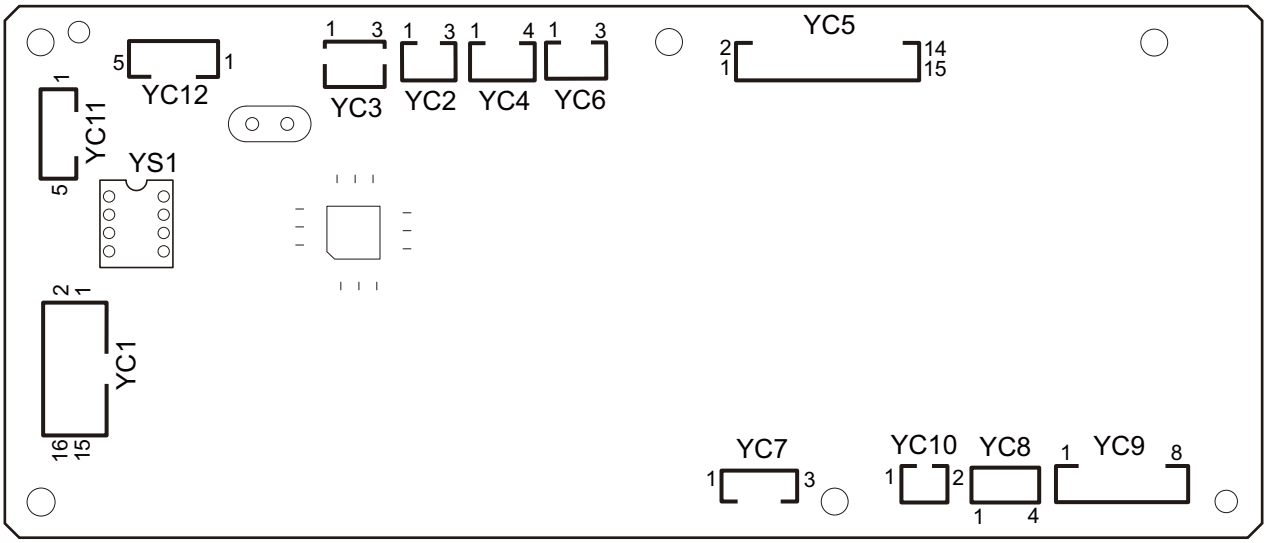

Figure 2-3-5 DP main PWB silk-screen diagram

Connector	Pin	Signal	I/O	Voltage	Description
YC1	1	FG	-	-	Ground
Connected to engine PWB	2	ENG_TMG	O	0/3.3 V DC	DPTS: On/Off
	3	ENG_RDY	O	0/3.3 V DC	Ready signal
	4	ENG_SEL	I	0/3.3 V DC	Select signal
	5	ENG_CLK	I	0/3.3 V DC(pulse)	Clock signal
	6	ENG_SI	I	0/3.3 V DC(pulse)	Serial communication data signal
	7	ENG_SO	O	0/3.3 V DC(pulse)	Serial communication data signal
	8	ENG_OPEN	O	0/3.3 V DC	DPOCS: On/Off
	9	NC	-	-	Not used
	10	GND	-	-	Ground
	11	GND	-	-	Ground
	12	GND	-	-	Ground
	13	NC	-	-	Not used
	14	+24V	O	24 V DC	24 V DC power input from EPWB
	15	+24V	O	24 V DC	24 V DC power input from EPWB
	16	+24V	O	24 V DC	24 V DC power input from EPWB
YC2	1	ANODE	O	3.3 V DC	3.3 V DC power output to DPOLS
Connected to DP original size length sensor	2	GND	-	-	Ground
	3	LS_SW	I	0/3.3 V DC	DPOLS: On/Off
YC3	1	ANODE	O	3.3 V DC	3.3 V DC power output to DPOS
Connected to DP original sensor	2	GND	-	-	Ground
	3	SET_SW	I	0/3.3 V DC	DPOS: On/Off
YC4	1	WID1	I	0/3.3 V DC	DPOWS: On/Off
Connected to DP original size width sensor	2	GND	-	-	Ground
	3	WID2	I	0/3.3 V DC	DPOWS: On/Off
	4	WID3	I	0/3.3 V DC	DPOWS: On/Off

Connector	Pin	Signal	I/O	Voltage	Description
YC5	1	ANODE	O	3.3 V DC	3.3 V DC power output to DPPFS
Connected to DP paper feed sensor,DP registration sensor,DP open/close sensor,DP switchback sensor and DP timing sensor	2	GND	-	-	Ground
	3	FEED SW	I	0/3.3 V DC	DPPFS: On/Off
	4	ANODE	O	3.3 V DC	3.3 V DC power output to DPRS
	5	GND	-	-	Ground
	6	REGIST_SW	I	0/3.3 V DC	DPRS: On/Off
	7	ANODE	O	3.3 V DC	3.3 V DC power output to DPOCS
	8	GND	-	-	Ground
	9	DP_OPENSW	I	0/3.3 V DC	DPOCS: On/Off
	10	ANODE	O	3.3 V DC	3.3 V DC power output to DPSBS
	11	GND	-	-	Ground
	12	HP_SW	I	0/3.3 V DC	DPSBS: On/Off
	13	ANODE	O	3.3 V DC	3.3 V DC power output to DPTS
	14	GND	-	-	Ground
	15	TMG_SW	I	0/3.3 V DC	DPTS: On/Off
YC6	1	NC	-	-	Not used
Connected to DP LED PWB	2	GND	-	-	Ground
	3	LED_REM	O	0/3.3 V DC	LED control signal
YC7	1	+24V	O	24 V DC	24 V DC power output to DPILSW
Connected to DP interlock switch	2	GND	-	-	Ground
	3	+R24V	I	24 V DC	24 V DC power input from DPILSW
YC8	1	FEED_CL	O	0/24 V DC	DPPFCL: On/Off
Connected to DP paper feed clutch and DP registration clutch	2	+R24V	O	24 V DC	24 V DC power output to DPPFCL
	3	REGIST_CL	O	0/24 V DC	DPRCL: On/Off
	4	+R24V	O	24 V DC	24 V DC power output to DPRCL
YC9	1	CNVY_-BN	O	0/24 V DC(pulse)	DPPFM drive control signal
Connected to DP paper feed motor and DP switchback motor	2	CNVY_-AN	O	0/24 V DC(pulse)	DPPFM drive control signal
	3	CNVY_+A	O	0/24 V DC(pulse)	DPPFM drive control signal
	4	CNVY_+B	O	0/24 V DC(pulse)	DPPFM drive control signal
	5	JNC_-BN	O	0/24 V DC(pulse)	DPSBM drive control signal
	6	JNC_-AN	O	0/24 V DC(pulse)	DPSBM drive control signal
	7	JNC_+A	O	0/24 V DC(pulse)	DPSBM drive control signal
	8	JNC_+B	O	0/24 V DC(pulse)	DPSBM drive control signal

2-4-1 Appendixes

(1) Maintenance kits

Maintenance part name		Parts No.	Alternative part No.
Name used in service	Name used in parts list		
MK-477/MAINTENANCE KIT	MK-477/MAINTENANCE KIT	1702K37US0	072K37US
Primary paper feed unit	PRIMARY FEED UNIT	-	-
MP separation pad	SEPARATION PAD	-	-
MP paper feed roller	MPF ROLLER	-	-
Registration cleaner	REGIST CLEANER	-	-
Transfer roller unit	TR-475	-	-
Drum unit	DK-475	-	-
Developerunit	DV-475	-	-
Fuser unit	FK-475(U)	-	-
MK-475/MAINTENANCE KIT	MK-475/MAINTENANCE KIT	1702K38NL0	072K38NL
Primary paper feed unit	PRIMARY FEED UNIT	-	-
MP separation pad	SEPARATION PAD	-	-
MP paper feed roller	MPF ROLLER	-	-
Registration cleaner	REGIST CLEANER	-	-
Transfer roller unit	TR-475	-	-
Drum unit	DK-475	-	-
Developier unit	DV-475	-	-
Fuser unit	FK-475(E)	-	-
MK-479/MAINTENANCE KIT	MK-479/MAINTENANCE KIT	1702K38AS0	072K38AS
Primary paper feed unit	PRIMARY FEED UNIT	-	-
MP separation pad	SEPARATION PAD	-	-
MP paper feed roller	MPF ROLLER	-	-
Registration cleaner	REGIST CLEANER	-	-
Transfer roller unit	TR-475	-	-
Drum unit	DK-475	-	-
Developer unit	DV-475	-	-
Fuser unit	FK-475(E)	-	-
MK-470/MAINTENANCE KIT	MK-470/MAINTENANCE KIT	1703M80UN0	073M80UN
DP papar feed roller	FEED ROLLER (DP)	-	-
DP separation pulley cover	RETARD GUIDE (DP)	-	-
DP separation pulley	RETARD ROLLER (DP)	-	-

(2) Repetitive defects gauge

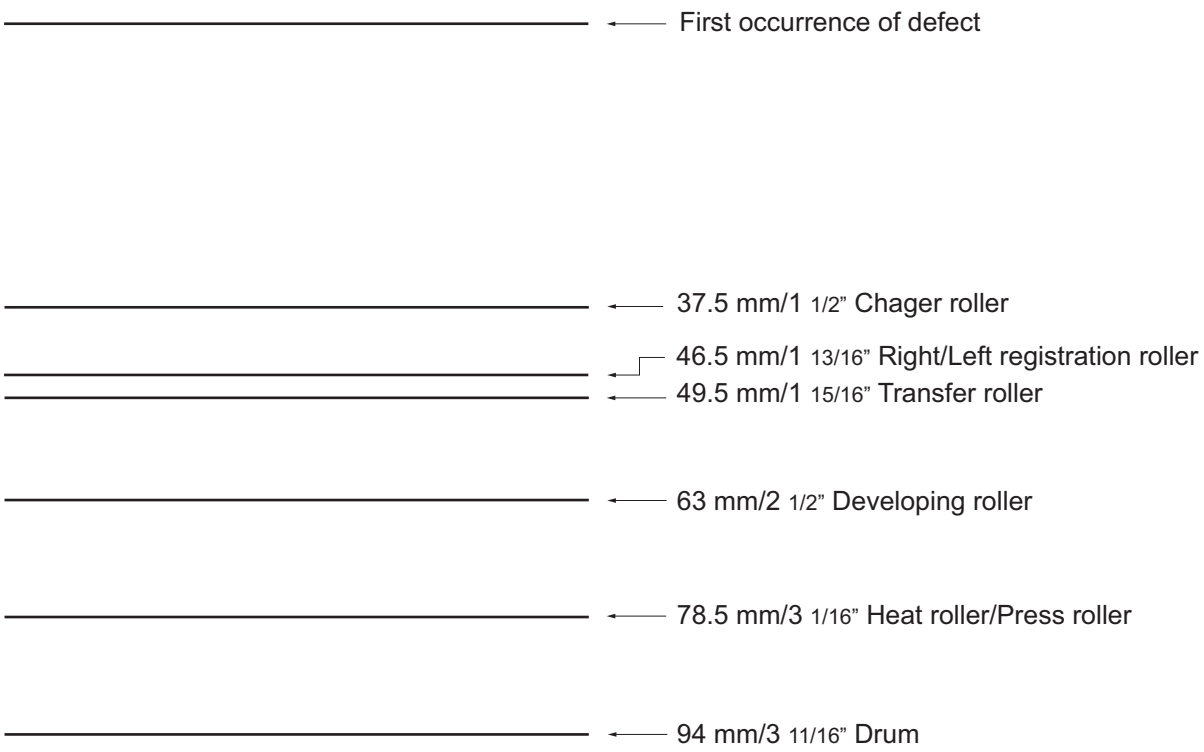

(3) Firmware environment commands

The printer maintains a number of printing parameters in its memory. There parameters may be changed permanently with the FRPO (Firmware RePrOgram) commands.
This section provides information on how to use the FRPO command and its parameters using examples.

Using FRPO commands for reprogramming firmware

The current settings of the FRPO parameters are listed as optional values on the service status page.

Note: Before changing any FRPO parameter, print out a service status page, so you will know the parameter values before the changes are made. To return FRPO parameters to their factory default values, send the FRPO INIT (FRPO-INITialize) command.(!R! FRPO INIT; EXIT;)

The FRPO command is sent to the printer in the following sequence:
!R! FRPO parameter, value; EXIT;
Example: Changing emulation mode to PC-PR201/65A
!R! FRPO P1, 11; EXIT;

FRPO parameters

Item	FRPO	Setting values	Factory setting
Default pattern resolution	B8	0: 300 dpi 1: 600 dpi	0
Copy count	C0	Number of copies to print:1-999	1
Page orientation	C1	0: Portrait 1: Landscape	0
Default font No. *	C2 C3 C5	Middle two digits of power-up font Last two digits of power-up font First two digits of power-up font	0 0 0
PCL font switch	C8	0:HP compatibility mode (Characters higher than 127 are not printed.) 32:Conventional mode (Characters higher than 127 are printed. Supported symbol sets: ISO-60 Norway [00D], ISO-15 Italian [00I], ISO-11 Sweden [00S], ISO-6 ASCII [00U], ISO-4 U.K. [01E], ISO-69 France [01F], ISO-21 Germany [01G], ISO-17 Spain [02S], Symbol [19M][a])	0
Print density	D4	Number from 1 (Light) to 5 (Dark)	3
Total host buffer size	H8	0 to 99 in units of the size defined by FRPO S5	5
Form feed time-out value	H9	Value in units of 5 seconds (0 to 99).	6
Reduce ratio	J0	0: 100 % 5: 70 % 6: 81 % 7: 86 % 8: 94 % 9: 98 %	0

Item	FRPO	Setting values	Factory setting
KIR mode	N0	0: Off 2: On	2
Duplex binding	N4	0: Off 1: Long edge 2: Short edge	0
Sleep timer time-out time	N5	1 to 240 minutes [0: Off]	15
Ecoprint level	N6	0: Off 2: On	0
Default emulation mode	P1	6: PCL 6 9: KPDL	9(U.S.A) or 6(Euro and other)
Carriage-return action *	P2	0: Ignores 0x0d 1: Carriage-return 2: Carriage-return+linefeed	1
Linefeed action *	P3	0: Ignores 0x0d 1: Linefeed 2: Linefeed+carriage-return	1
Automatic emulation sensing (For KPDL3)	P4	0: AES disabled 1: AES enabled	1(U.S.A) or 0(Euro and other)
Alternative emulation (For KPDL3)	P5	Same as the P1 values except that 9 is ignored.	6
Automatic emulation switching trigger (For KPDL3)	P7	0: Page eject commands 1: None 2: Page eject and prescribe EXIT 3: Prescribe EXIT 4: Formfeed (^L) 6: Page eject, prescribe EXIT and formfeed 10: Page eject commands; if AES fails, resolves to KPDL	11(U.S.A) or 10(Euro and other)
Command recognition character	P9	ASCII code of 33 to 126	82 (R)

Item	FRPO	Setting values	Factory setting
Default stacker	R0	1 (inner tray) 3 5	1
Default paper size	R2	0: Size of the default paper cassette (See R4.) 1: Monarch (3-7/8 × 7-1/2 inches) 2: Business (4-1/8 × 9-1/2 inches) 3: International DL (11 × 22 cm) 4: International C5 (16.2 × 22.9 cm) 5: Executive (7-1/4 × 10-1/2 inches) 6: US Letter (8-1/2 × 11 inches) 7: US Legal (8-1/2 × 14 inches) 8: A4 (21.0 × 29.7 cm) 9: JIS B5 (18.2 × 25.7 cm) 10: A3 (29.7 ´ 42 cm) 11: B4 (25.7 ´ 36.4 cm) 12: US Ledger (11 ´ 17 inches) 13: ISO A5 14: A6 (10.5 × 14.8 cm) 15: JIS B6 (12.8 × 18.2 cm) 16: Commercial #9 (3-7/8 × 8-7/8 inches) 17: Commercial #6 (3-5/8 × 6-1/2 inches) 18: ISO B5 (17.6 × 25 cm) 19: Custom (11.7 × 17.7 inches) 30: C4 (22.9 ´ 32.4 cm) 31: Hagaki (10 × 14.8 cm) 32: Ofuku-hagaki (14.8 × 20 cm) 33: Officio II 39: 8K 40: 16K 42: 8.5 × 13.5 inches 50: Statement 51: Folio 52: Youkei 2 53: Youkei 4	0
Default cassette	R4	0: MP tray 1: Cassette 1 2: Cassette 2 3: Cassette 3	1

Item	FRPO	Setting values	Factory setting
MP tray paper size	R7	Same as the R2 values except: 0	6(U.S.A) or 8(Euro and other)
A4/letter equation	S4	0: Off 1: On	1
Host buffer size	S5	0: 10kB (x H8) 1: 100kB (x H8) 2: 1024kB (x H8)	1
RAM disk size	S6	1 to 1024 MB	400
RAM disk mode	S7	0: Off 1: On	0
Wide A4	T6	0: Off 1: On	0
Line spacing *	U0	Lines per inch (integer value)	6
Line spacing *	U1	Lines per inch (fraction value)	0
Character spacing *	U2	Characters per inch (integer value)	10
Character spacing *	U3	Characters per inch (fraction value)	0
Country code	U6	0: US-ASCII 1: France 2: Germany 3: UK 4: Denmark 5: Sweden 6: Italy 7: Spain 8: Japan 9: US Legal 10: IBM PC-850 (Multilingual) 11: IBM PC-860 (Portuguese) 12: IBM PC-863 (Canadian French) 13: IBM PC-865 (Norwegian) 14: Norway 15: Denmark 2 16: Spain 2 17: Latin America 21: US ASCII (U7 = 50 SET) 77: HP Roman-8 (U7 = 52 SET)	41
Code set at power up in daisy-wheel emulation	U7	0: Same as the default emulation mode (P1) 1: IBM 6: IBM PC-8 50: US ASCII (U6 = 21 SET) 52: HP Roman-8 (U6 = 77 SET)	53

Item	FRPO	Setting values	Factory setting
Font pitch for fixed pitch scalable font	U8	Integer value in cpi: 0 to 99	10
	U9	Fraction value in 1/100 cpi: 0 to 99	0
Font height for the default scalable font *	V0	Integer value in 100 points: 0 to 9	0
	V1	Integer value in points: 0 to 99	12
	V2	Fraction value in 1/100 points: 0, 25, 50, 75	0
Default scalable font *	V3	Name of typeface of up to 32 characters, enclosed with single or double quotation marks	Courier
Default weight (courier and letter Gothic)	V9	0: Courier = darkness Letter Gothic = darkness 1: Courier = regular Letter Gothic = darkness 4: Courier = darkness Letter Gothic = regular 5: Courier = regular Letter Gothic = regular	5

Item	FRPO	Setting values	Factory setting
Paper type for the MP tray	X0	1: Plain 1 2: Transparency 3: Preprinted 4: Label 5: Bond 6: Recycle 7: Vellum 9: Letterhead 10: Color 11: Prepunched 12: Envelope 13: Cardstock 16: Thick 17: High quality 21: Custom1 22: Custom2 23: Custom3 24: Custom4 25: Custom5 26: Custom6 27: Custom7 28: Custom8	1

Item	FRPO	Setting values	Factory setting
Paper type for paper cassettes 1	X1	1: Plain 3: Preprinted 5: Bond 6: Recycled 9: Letterhead 10: Color 11: Prepunched 17: High quality 21: Custom1 22: Custom2 23: Custom3 24: Custom4 25: Custom5 26: Custom6 27: Custom7 28: Custom8	1
Paper type for paper cassettes 2 to 4	X2 X3	1: Plain 3: Preprinted 5: Bond 6: Recycled 9: Letterhead 10: Color 11: Prepunched 17: High quality 21: Custom1 22: Custom2 23: Custom3 24: Custom4 25: Custom5 26: Custom6 27: Custom7 28: Custom8	1
PCL paper source	X9	0: Performs paper selection depending on media type. 1: Performs paper selection depending on paper sources.	0

Item	FRPO	Setting values	Factory setting
Automatic continue for ‘Press GO’	Y0	0: Off 1: On	0
Automatic continue timer	Y1	Number from 0 to 99 in increments of 5 seconds	6 (30 secons)
Error message for device error	Y3	0: Not detect 1: Detect	0
Duplex operation for specified paper type (Prepunched, Preprintedand Letterhead)	Y4	0: Off 1: On	0
Default operation for PDF direct printing	Y5	0: Enlarges or reduces the image to fit in the current paper size. Loads paper from the current paper cassette. 1: Through the image. Loads paper which is the same size as the image. 2: Enlarges or reduces the image to fit in the current paper size. Loads Letter, A4 size paper depending on the image size. 3: Through the image. Loads Letter, A4 size paper depending on the image size. 8: Through the image. Loads paper from the current paper cassette. 9: Through the image. Loads Letter, A4 size paper depending on the image size. 10: Enlarges or reduces the image to fit in the current paper size. Loads Letter, A4 size paper depending on the imagesize.	0
e-MPS error	Y6	0:Does not print the error report and display the error message. 1:Prints the error report. 2:Displays the error message. 3:Prints the error report and displays the error message.	3

a. Characters higher than 127 are printed regardless of the C8 value. However, setting C8 to 0 does not print character code 160.

(4) Chart of image adjustment procedures

Adjusting order	Item	Image	Description	Maintenance mode		Original	Page	Remarks
				Item No.	Mode			
1	Adjusting the magnification in the main scanning direction (printing adjustment)	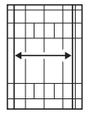	Polygon motor speed adjustment	U053	POLYGON	U053 test pattern	P.1-3-23	
2	Adjusting the magnification in the auxiliary scanning direction (printing adjustment)	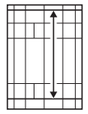	Drive motor speed adjustment	U053	MAIN	U053 test pattern	P.1-3-23	
3	Adjusting the center line of the MP tray (printing adjustment)	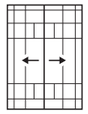	Adjusting the LSU print start timing	U034	LSUOUT LEFT (MPT)	U034 test pattern	P.1-3-18	To make an adjustment for duplex copying, select LSUOUT LEFT (DUPLEX).
4	Adjusting the center line of the cassettes (printing adjustment)	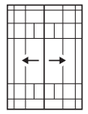	Adjusting the LSU print start timing	U034	LSUOUT LEFT (CASSETTE 1) LSUOUT LEFT (CASSETTE 2) LSUOUT LEFT (CASSETTE 3)	U034 test pattern	P.1-3-18	Cassette 1: select Center (CASSETTE 1) Cassette 2: select Center (CASSETTE 2) Cassette 3: select Center (CASSETTE 3)
5	Adjusting the leading edge registration of the MP tray (printing adjustment)	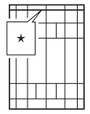	Registration motor turning on timing (secondary paper feed start timing)	U034	LSUOUT TOP MPT(L) LSUOUT TOP MPT(S)	U034 test pattern	P.1-3-18	To make an adjustment for duplex copying, select LSUOUT TOP DUPLEX. L: PAPER WIDTH 218mm or more S: PAPER WIDTH less than 218mm
6	Adjusting the leading edge registration of the cassette (printing adjustment)	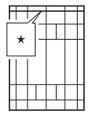	Registration motor turning on timing (secondary paper feed start timing)	U034	LSUOUT TOP CASSETTE(L) SUOUT TOP CASSETTE(S)	U034 test pattern	P.1-3-18	L: PAPER WIDTH 218mm or more S: PAPER WIDTH less than 218mm
7	Adjusting the leading edge margin (printing adjustment)	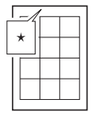	LSU illumination start timing	U402	LESD	U402 test pattern	P.1-3-55	
8	Adjusting the trailing edge margin (printing adjustment)	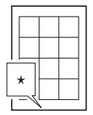	LSU illumination end timing	U402	TRAIL	U402 test pattern	P.1-3-55	
9	Adjusting the left and right margins (printing adjustment)	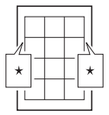	LSU illumination start/end timing	U402	A MARGIN C MARGIN	U402 test pattern	P.1-3-55	
10	Adjusting magnification of the scanner in the main scanning direction (scanning adjustment)	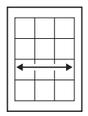	Data processing	U065 U070	Y SCAN ZOOM Y SCAN ZOOM	Test chart	P.1-3-25 P.1-3-31	U065: For copying an original placed on the platen. U070: For copying originals from the DP.

Adjusting order	Item	Image	Description	Maintenance mode		Original	Page	Remarks
				Item No.	Mode			
11	Adjusting magnification of the scanner in the auxiliary scanning direction (scanning adjustment)	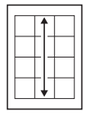	Original scanning speed	U065 U070	X SCAN ZOOM X SCAN ZOOM	Test chart	P.1-3-25 P.1-3-31	U065: For copying an original placed on the platen. U070: For copying originals from the DP.
12	Adjusting the center line (scanning adjustment)	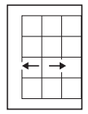	Adjusting the original scan data (image adjustment)	U067 U072	FRONT ROTATE FRONT BACK	Test chart	P.1-3-28 P.1-3-34	U067: For copying an original placed on the platen. To make an adjustment for rotate copying, select ROTATE. U072: For copying originals from the DP. To make an adjustment for duplex copying, select BACK.
13	Adjusting the leading edge registration (scanning adjustment)	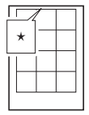	Original scan start timing	U066 U071	FRONT ROTATE FRONT HEAD BACK HEAD	Test chart	P.1-3-27 P.1-3-32	U066: For copying an original placed on the platen. To make an adjustment for trailing edge registration, select ROTATE. U071: For copying originals from the DP. To make an adjustment for duplex copying, select BACK HEAD.
14	Adjusting the leading edge margin (scanning adjustment)	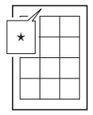	Adjusting the original scan data (image adjustment)	U403 U404	B MARGIN B MARGIN	Test chart	P.1-3-56 P.1-3-57	U403: For copying an original placed on the contact glass U404: For copying originals from the DP.
15	Adjusting the trailing edge margin (scanning adjustment)	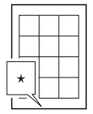	Adjusting the original scan data (image adjustment)	U403 U404	D MARGIN D MARGIN	Test chart	P.1-3-56 P.1-3-57	U403: For copying an original placed on the contact glass U404: For copying originals from the DP.
16	Adjusting the left and right margins (scanning adjustment)	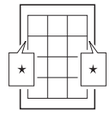	Adjusting the original scan data (image adjustment)	U403 U404	A MARGIN C MARGIN A MARGIN C MARGIN	Test chart	P.1-3-56 P.1-3-57	U403: For copying an original placed on the contact glass U404: For copying originals from the DP.

When maintenance item U411 (Automatic adjustment in the scanner) is run using the specified original (P/N 7505000005), the following adjustments are automatically made:
Adjusting the scanner magnification (U065)
Adjusting the scanner leading edge registration (U066)
Adjusting the scanner center line (U067)

When maintenance item U411 (Automatic adjustment in the DP) is run using the specified original (P/N 303LJ57010), the following adjustments are automatically made:
Adjusting the DP magnification (U070)
Adjusting the DP leading edge registration (U071)
Adjusting the DP center line (U072)

Image quality

Item	Specifications
100% magnification	Machine: ±0.8% Using DP: ±1.5%
Enlargement/reduction	Machine: ±1.0% Using DP: ±1.5%
Lateral squareness	Machine: ±1.5 mm/375 mm Using DP: ±2.5 mm/375 mm
Leading edge registration	Cassette: +1.0/-1.5 mm MP tray: +1.0/-1.5 mm Duplex: +1.0/-1.5 mm
Skewed paper feed (left-right difference)	Cassette: 1.5 mm or less MP tray: 1.5 mm or less Duplex: 2.0 mm or less
Lateral image shifting	Cassette: ±2.0 mm MP tray: ±2.0 mm Duplex: ±3.0 mm

(5) Wiring diagram

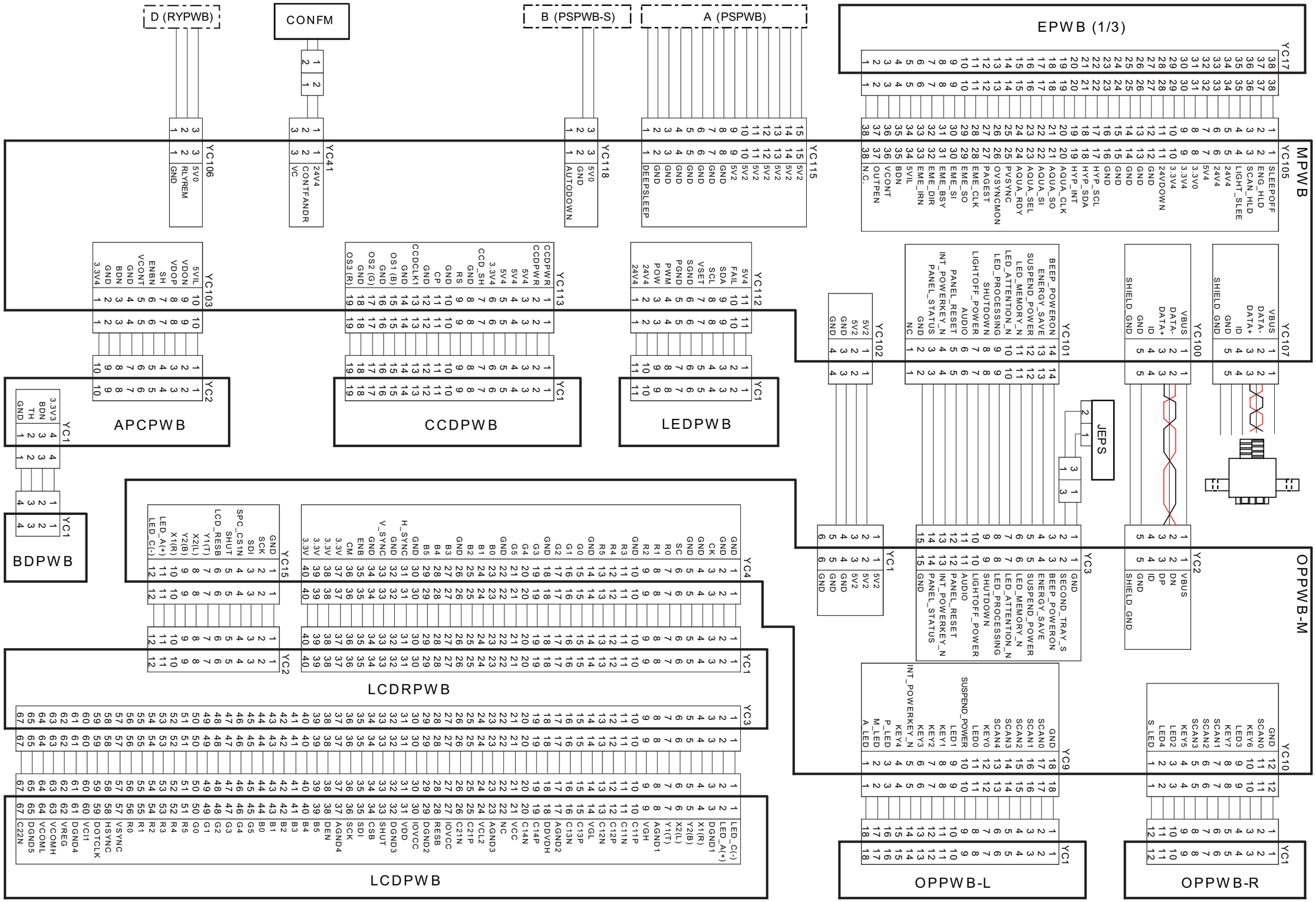

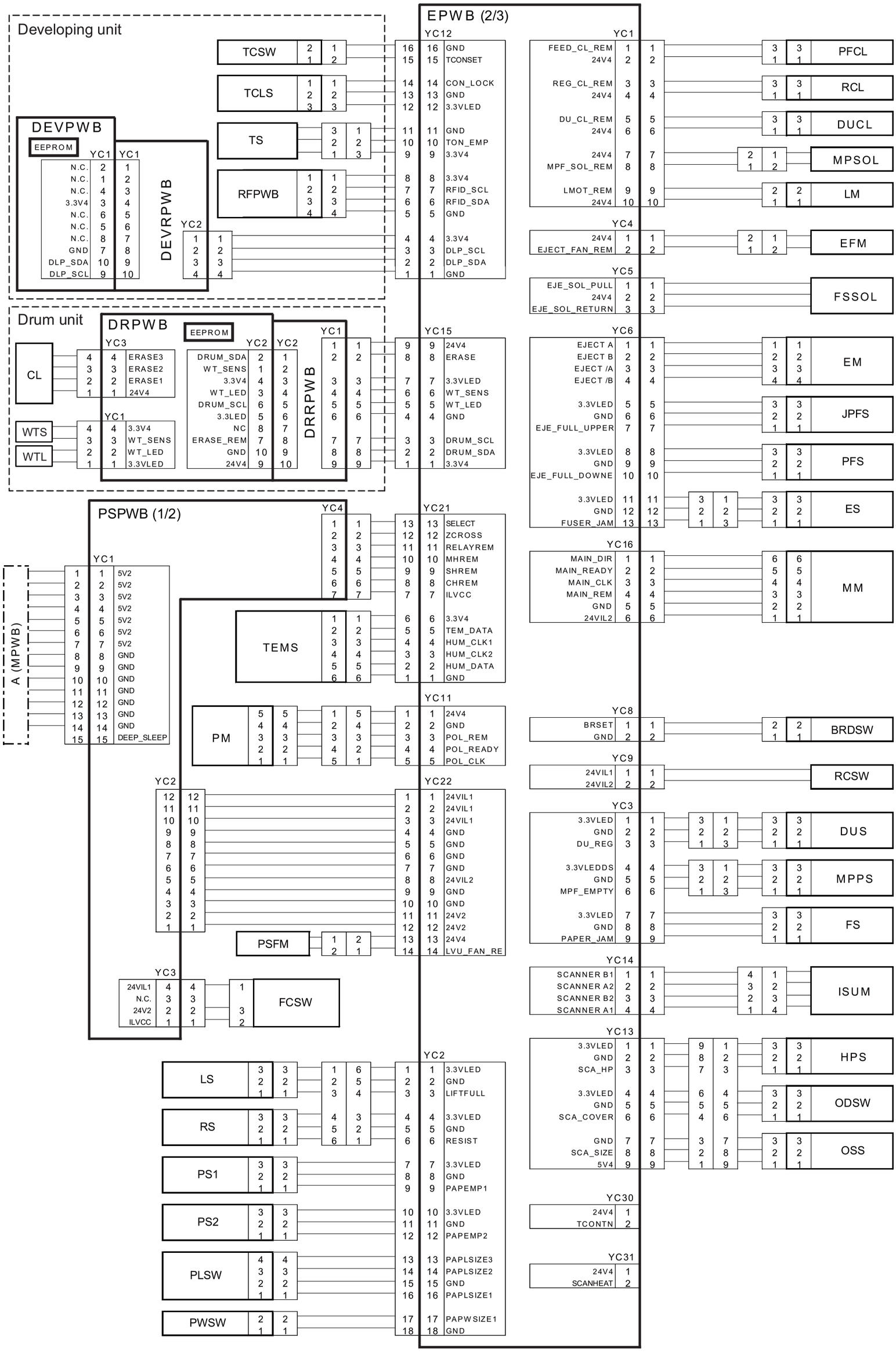
Developing unit
DEVPWB
EEPROM
YC1 YC1
N.C. 2 1
N.C. 1 2
N.C. 4 3
3.3V4 3 4
N.C. 6 5
N.C. 5 6
N.C. 8 7
GND 7 8
DLP_SDA 10 9
DLP_SCL 9 10
DEVRPWB
YC2
1 1
2 2
3 3
4 4
TCSW
TCLS
TS
RFPWB
EPWB (2/3)
YC12
16 16 GND
15 15 TCONSET
14 14 CON_LOCK
13 13 GND
12 12 3.3VLED
11 11 GND
10 10 TON_EMP
9 9 3.3V4
8 8 3.3V4
7 7 RFID_SCL
6 6 RFID_SDA
5 5 GND
4 4 3.3V4
3 3 DLP_SCL
2 2 DLP_SDA
1 1 GND
YC1
FEED_CL_REM 1 1
24V4 2 2
REG_CL_REM 3 3
24V4 4 4
DU_CL_REM 5 5
24V4 6 6
24V4 7 7
MPF_SOL_REM 8 8
LMOT_REM 9 9
24V4 10 10
PFCL
RCL
DUCL
MPSOL
LM
YC4
24V4 1 1
EJECT_FAN_REM 2 2
EFM
YC5
EJE_SOL_PULL 1 1
24V4 2 2
EJE_SOL_RETURN 3 3
FSSOL
Drum unit
DRPWB
EEPROM
YC3
4 4 ERASE3
3 3 ERASE2
2 2 ERASE1
1 1 24V4
YC2
DRUM_SDA 2 1
WT_SENS 1 2
3.3V4 4 3
WT_LED 3 4
DRUM_SCL 6 5
3.3LED 5 6
NC 8 7
ERASE_REM 7 8
GND 10 9
24V4 9 10
YC2
DRRPWB
YC1
1 1
2 2
3 3
4 4
5 5
6 6
7 7
8 8
9 9
CL
WTS
WTL
YC1
4 4 3.3V4
3 3 WT_SENS
2 2 WT_LED
1 1 3.3VLED
YC15
9 9 24V4
8 8 ERASE
7 7 3.3VLED
6 6 WT_SENS
5 5 WT_LED
4 4 GND
3 3 DRUM_SCL
2 2 DRUM_SDA
1 1 3.3V4
YC6
EJECT A 1 1
EJECT B 2 2
EJECT /A 3 3
EJECT /B 4 4
3.3VLED 5 5
GND 6 6
EJE_FULL_UPPER 7 7
3.3VLED 8 8
GND 9 9
EJE_FULL_DOWNE 10 10
3.3VLED 11 11
GND 12 12
FUSER_JAM 13 13
EM
JPFS
PFS
ES
PSPWB (1/2)
YC4
1 1
2 2
3 3
4 4
5 5
6 6
7 7
YC21
13 13 SELECT
12 12 ZCROSS
11 11 RELAYREM
10 10 MHREM
9 9 SHREM
8 8 CHREM
7 7 ILVCC
6 6 3.3V4
5 5 TEM_DATA
4 4 HUM_CLK1
3 3 HUM_CLK2
2 2 HUM_DATA
1 1 GND
TEMS
YC1
1 1 5V2
2 2 5V2
3 3 5V2
4 4 5V2
5 5 5V2
6 6 5V2
7 7 5V2
8 8 GND
9 9 GND
10 10 GND
11 11 GND
12 12 GND
13 13 GND
14 14 GND
15 15 DEEP_SLEEP
A (MPWB)
YC16
MAIN_DIR 1 1
MAIN_READY 2 2
MAIN_CLK 3 3
MAIN_REM 4 4
GND 5 5
24VIL2 6 6
MM
PM
YC11
1 1 24V4
2 2 GND
3 3 POL_REM
4 4 POL_READY
5 5 POL_CLK
YC8
BRSET 1 1
GND 2 2
BRDSW
YC9
24VIL1 1 1
24VIL2 2 2
RCSW
YC2
12 12
11 11
10 10
9 9
8 8
7 7
6 6
5 5
4 4
3 3
2 2
1 1
YC22
1 1 24VIL1
2 2 24VIL1
3 3 24VIL1
4 4 GND
5 5 GND
6 6 GND
7 7 GND
8 8 24VIL2
9 9 GND
10 10 GND
11 11 24V2
12 12 24V2
13 13 24V4
14 14 LVU_FAN_RE
PSFM
YC3
3.3VLED 1 1
GND 2 2
DU_REG 3 3
3.3VLEDDS 4 4
GND 5 5
MPF_EMPTY 6 6
3.3VLED 7 7
GND 8 8
PAPER_JAM 9 9
DUS
MPPS
FS
YC3
24VIL1 4 4
N.C. 3 3
24V2 2 2
ILVCC 1 1
FCSW
YC14
SCANNER B1 1 1
SCANNER A2 2 2
SCANNER B2 3 3
SCANNER A1 4 4
ISUM
YC13
3.3VLED 1 1
GND 2 2
SCA_HP 3 3
3.3VLED 4 4
GND 5 5
SCA_COVER 6 6
GND 7 7
SCA_SIZE 8 8
5V4 9 9
HPS
ODSW
OSS
LS
RS
PS1
PS2
PLSW
PWSW
YC2
1 1 3.3VLED
2 2 GND
3 3 LIFTFULL
4 4 3.3VLED
5 5 GND
6 6 RESIST
7 7 3.3VLED
8 8 GND
9 9 PAPEMP1
10 10 3.3VLED
11 11 GND
12 12 PAPEMP2
13 13 PAPLSIZE3
14 14 PAPLSIZE2
15 15 GND
16 16 PAPLSIZE1
17 17 PAPWSIZE1
18 18 GND
YC30
24V4 1
TCONTN 2
YC31
24V4 1
SCANHEAT 2

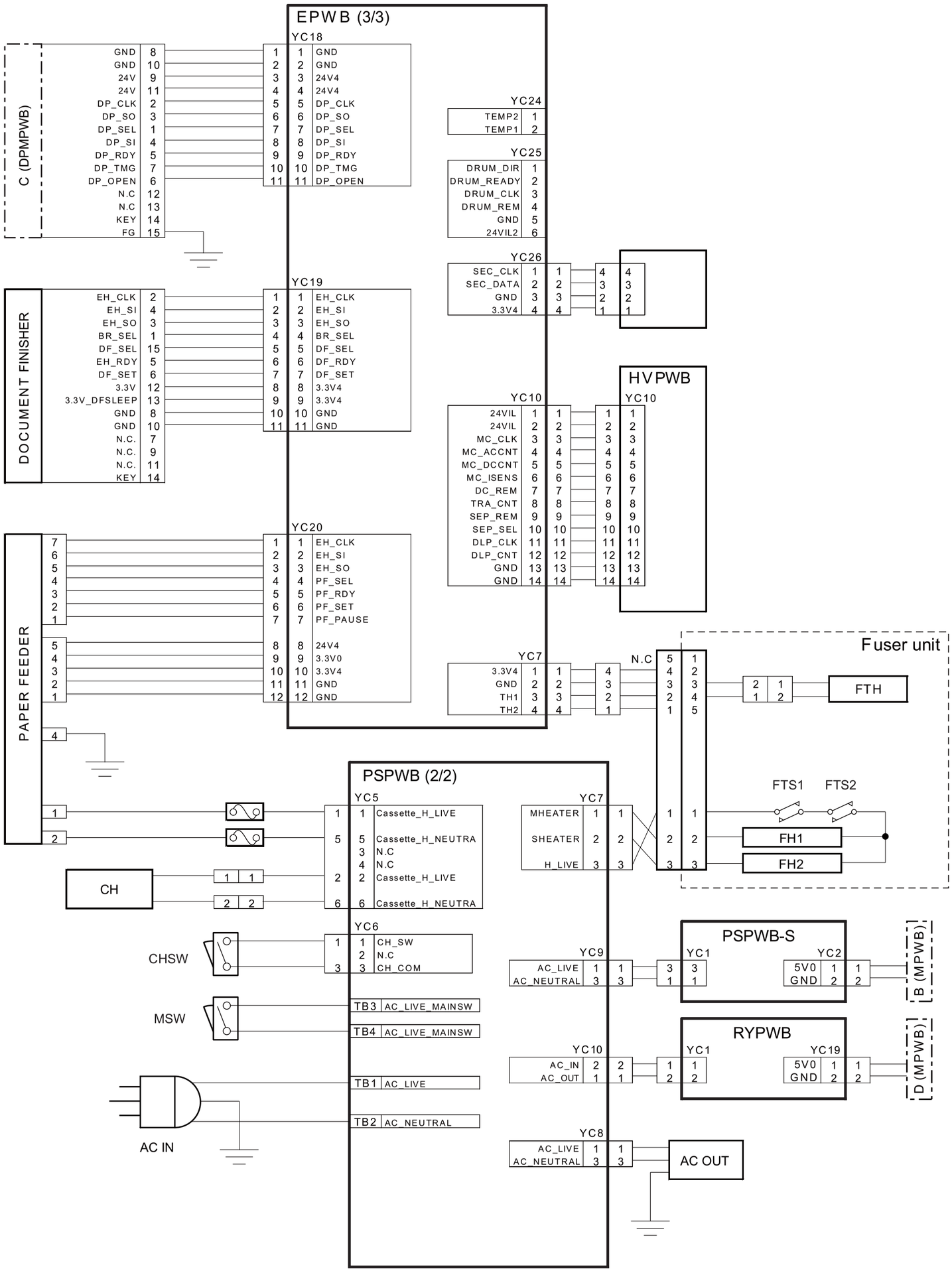
EPWB (3/3)
YC18
C (DPMPWB)
GND 8
GND 10
24V 9
24V 11
DP_CLK 2
DP_SO 3
DP_SEL 1
DP_SI 4
DP_RDY 5
DP_TMG 7
DP_OPEN 6
N.C 12
N.C 13
KEY 14
FG 15
1 GND
2 GND
3 24V4
4 24V4
5 DP_CLK
6 DP_SO
7 DP_SEL
8 DP_SI
9 DP_RDY
10 DP_TMG
11 DP_OPEN
YC24
TEMP2 1
TEMP1 2
YC25
DRUM_DIR 1
DRUM_READY 2
DRUM_CLK 3
DRUM_REM 4
GND 5
24VIL2 6
YC26
SEC_CLK 1
SEC_DATA 2
GND 3
3.3V4 4
YC19
DOCUMENT FINISHER
EH_CLK 2
EH_SI 4
EH_SO 3
BR_SEL 1
DF_SEL 15
EH_RDY 5
DF_SET 6
3.3V 12
3.3V_DFSLEEP 13
GND 8
GND 10
N.C. 7
N.C. 9
N.C. 11
KEY 14
1 EH_CLK
2 EH_SI
3 EH_SO
4 BR_SEL
5 DF_SEL
6 DF_RDY
7 DF_SET
8 3.3V4
9 3.3V4
10 GND
11 GND
HVPWB
YC10
24VIL 1
24VIL 2
MC_CLK 3
MC_ACCNT 4
MC_DCCNT 5
MC_ISENS 6
DC_REM 7
TRA_CNT 8
SEP_REM 9
SEP_SEL 10
DLP_CLK 11
DLP_CNT 12
GND 13
GND 14
YC20
PAPER FEEDER
1 EH_CLK
2 EH_SI
3 EH_SO
4 PF_SEL
5 PF_RDY
6 PF_SET
7 PF_PAUSE
8 24V4
9 3.3V0
10 3.3V4
11 GND
12 GND
YC7
3.3V4 1
GND 2
TH1 3
TH2 4
N.C
Fuser unit
FTH
FTS1
FTS2
FH1
FH2
PSPWB (2/2)
YC5
1 Cassette_H_LIVE
5 Cassette_H_NEUTRA
3 N.C
4 N.C
2 Cassette_H_LIVE
6 Cassette_H_NEUTRA
YC7
MHEATER 1
SHEATER 2
H_LIVE 3
CH
YC6
CHSW
1 CH_SW
2 N.C
3 CH_COM
MSW
TB3 AC_LIVE_MAINSW
TB4 AC_LIVE_MAINSW
TB1 AC_LIVE
TB2 AC_NEUTRAL
AC IN
YC9
AC_LIVE 1
AC_NEUTRAL 3
PSPWB-S
YC1
YC2
5V0 1
GND 2
B (MPWB)
YC10
AC_IN 2
AC_OUT 1
RYPWB
YC1
YC19
5V0 1
GND 2
D (MPWB)
YC8
AC_LIVE 1
AC_NEUTRAL 3
AC OUT

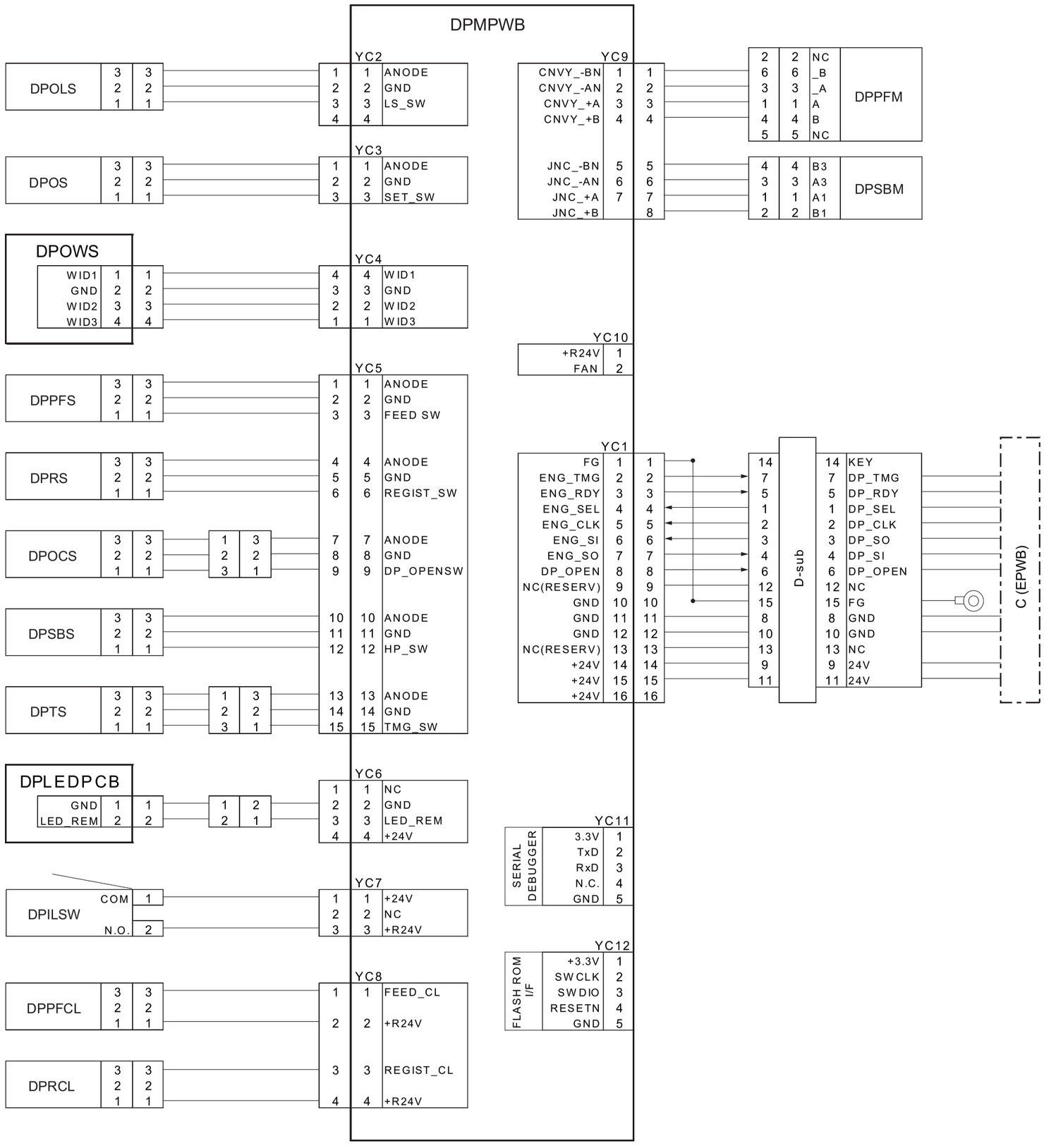
DPMPWB
DPOLS
DPOS
DPOWS
WID1
GND
WID2
WID3
DPPFS
DPRS
DPOCS
DPSBS
DPTS
DPLEDPCB
GND
LED_REM
DPILSW
COM
N.O.
DPPFCL
DPRCL
YC2
ANODE
GND
LS_SW
YC3
ANODE
GND
SET_SW
YC4
WID1
GND
WID2
WID3
YC5
ANODE
GND
FEED SW
ANODE
GND
REGIST_SW
ANODE
GND
DP_OPENSW
ANODE
GND
HP_SW
ANODE
GND
TMG_SW
YC6
NC
GND
LED_REM
+24V
YC7
+24V
NC
+R24V
YC8
FEED_CL
+R24V
REGIST_CL
+R24V
YC9
CNVY_-BN
CNVY_-AN
CNVY_+A
CNVY_+B
JNC_-BN
JNC_-AN
JNC_+A
JNC_+B
DPPFM
NC
_B
_A
A
B
NC
DPSBM
B3
A3
A1
B1
YC10
+R24V
FAN
YC1
FG
ENG_TMG
ENG_RDY
ENG_SEL
ENG_CLK
ENG_SI
ENG_SO
DP_OPEN
NC(RESERV)
GND
GND
GND
NC(RESERV)
+24V
+24V
+24V
D-sub
KEY
DP_TMG
DP_RDY
DP_SEL
DP_CLK
DP_SO
DP_SI
DP_OPEN
NC
FG
GND
GND
NC
24V
24V
C (EPWB)
SERIAL DEBUGGER
3.3V
TxD
RxD
N.C.
GND
YC11
FLASH ROM I/F
+3.3V
SWCLK
SWDIO
RESETN
GND
YC12

Paper feeder
Installation Guide

PF-470/471 PAPER FEEDER

PF-470

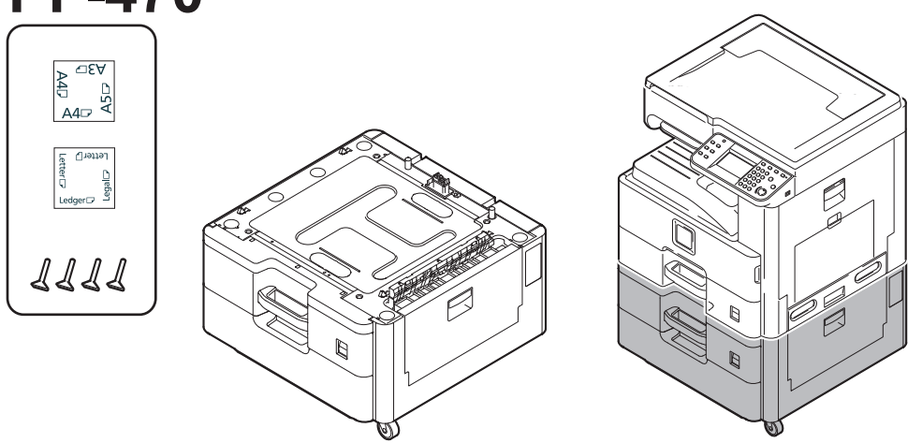

PF-471

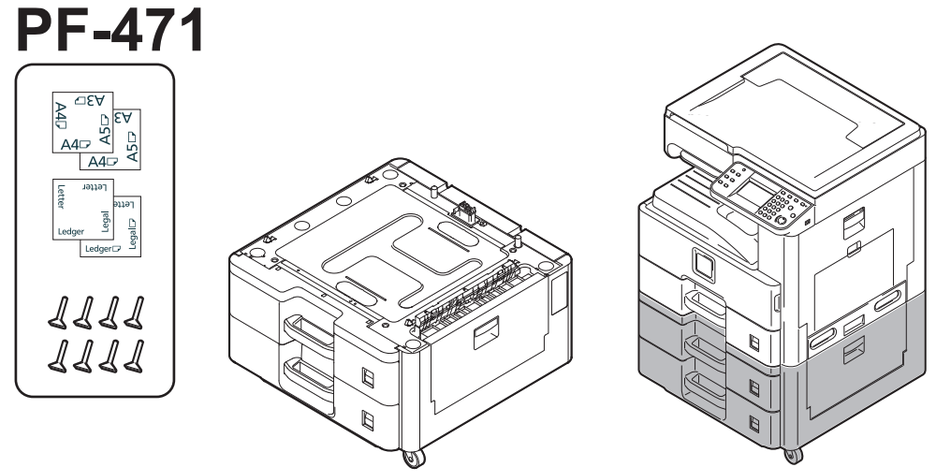

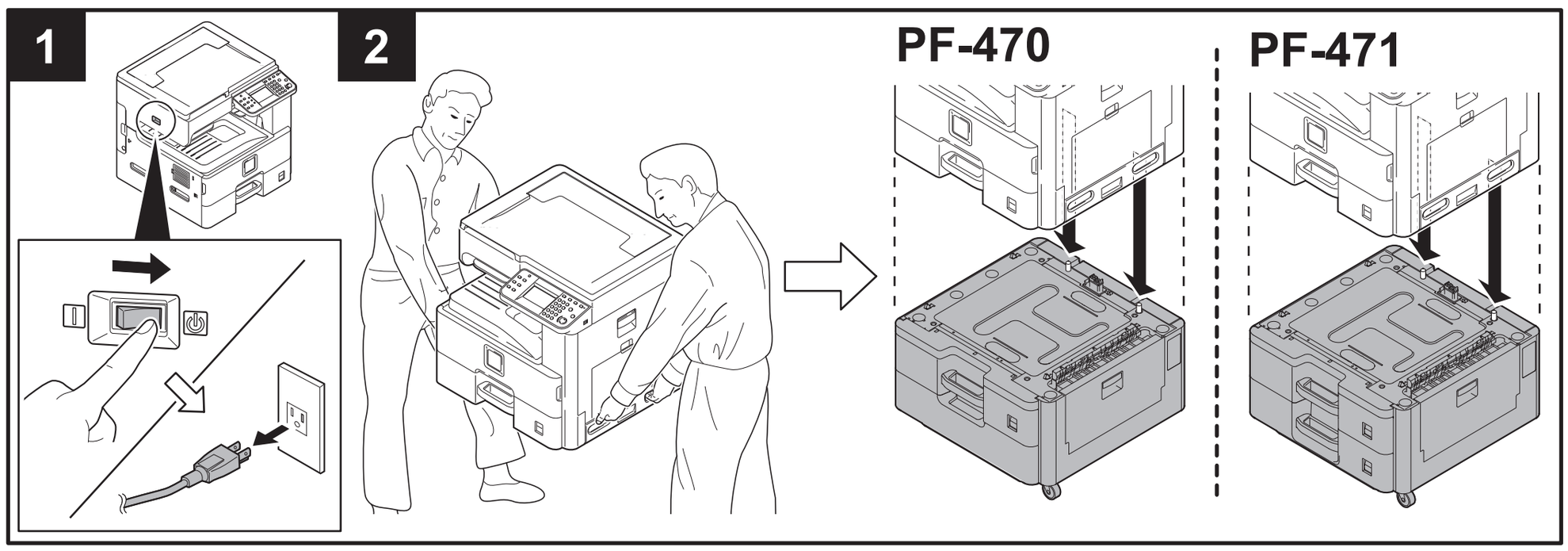

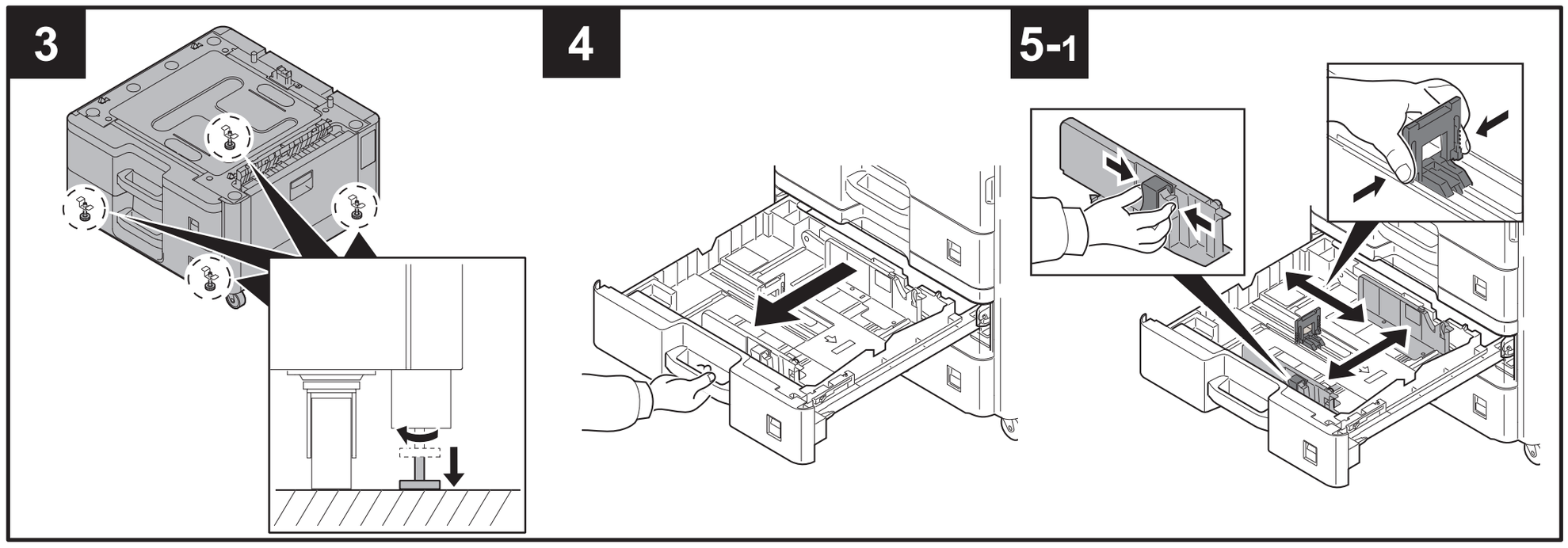

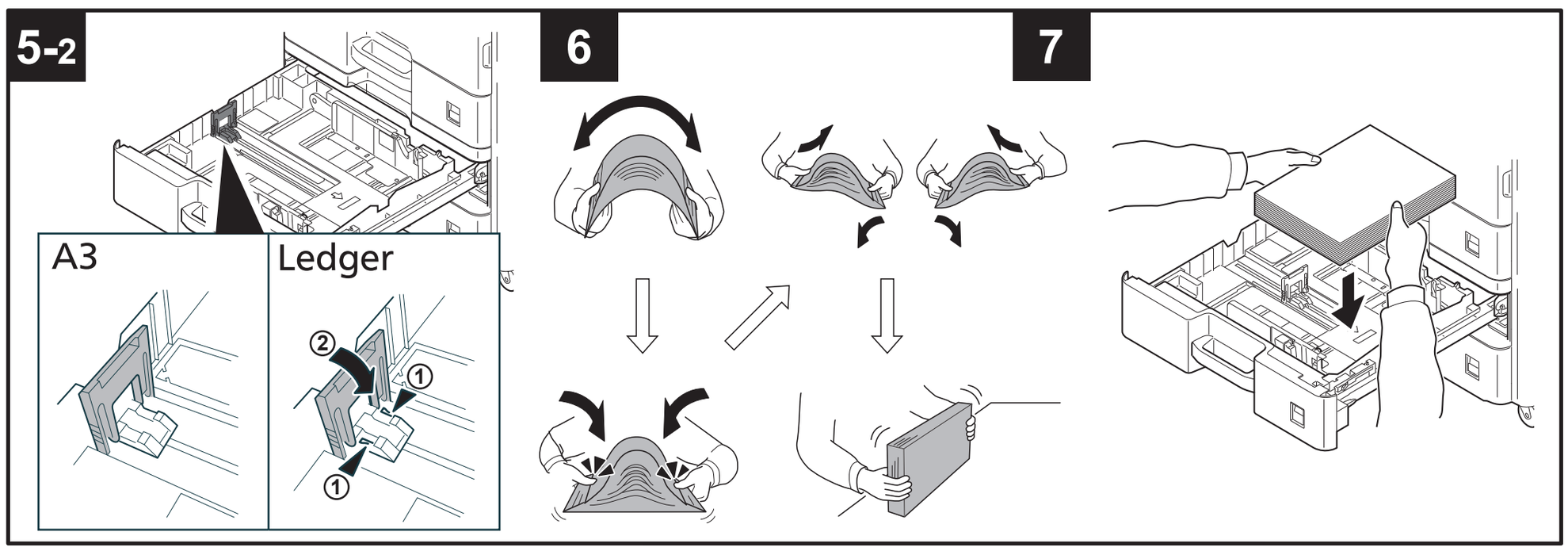

2010.9
303NN56710

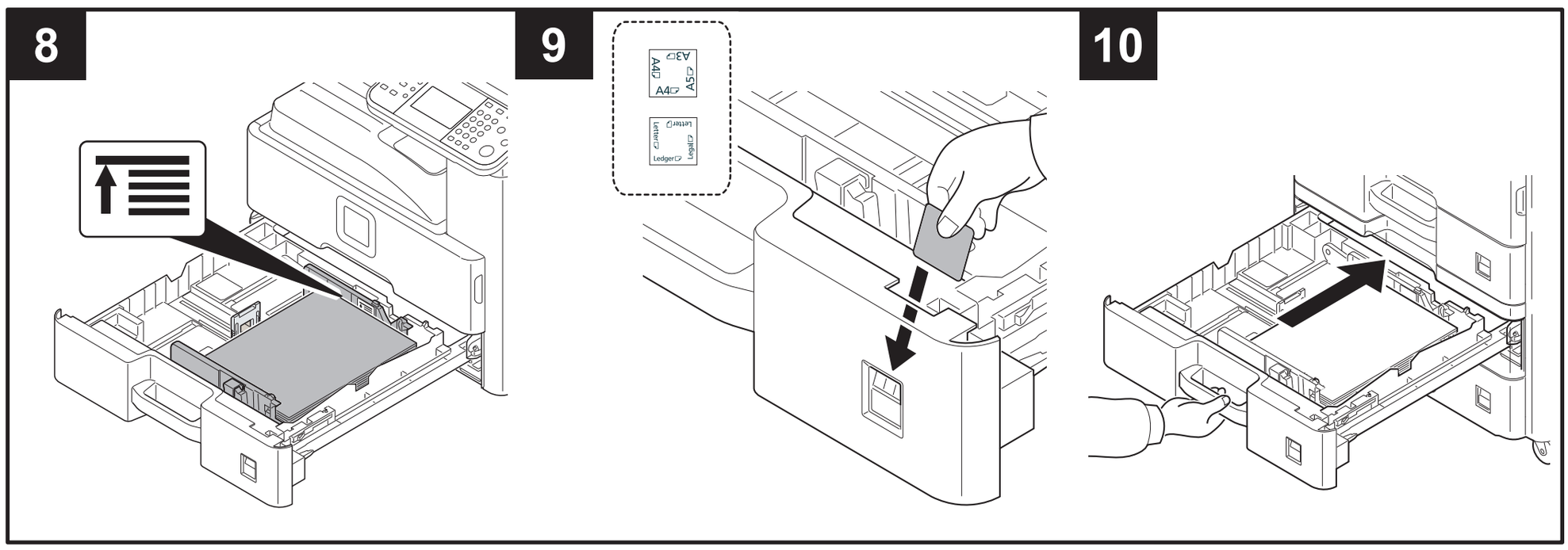

ENG

Fix Paper Width Guide
You can fix the paper width guide using the supplied retaining pins.
Follow the steps below as necessary.

FR

Fixation du guide de largeur du papier
Vous pouvez fixer le guide de largeur du papier en utilisant les goupilles de fixation fournies.
Suivez les étapes ci-dessous en fonction des besoins.

ES

Fijar la guía de anchura del papel
Puede fijar la guía de anchura del papel con los pernos de retén proporcionados.
Siga los pasos siguientes según sea necesario.

DE

Papierbreitenführung befestigen
Sie können die Papierbreitenführung mit den gelieferten Haltebolzen befestigen.
Folgen Sie den Schritten unten falls notwendig.

IT

Fissare la guida di larghezza carta
Per fissare la guida di larghezza carta, utilizzare i perni di fissaggio forniti.
Eseguire i seguenti punti come necessario.

CN

固定纸张宽度导板
您可以使用附带的定位销固定纸张宽度导板。
必要时执行如下步骤。

TW

固定紙張寬度導板
您可以使用隨附的定位卡榫固定紙張寬度導板。
如有必要，請執行以下步驟。

KO

용지폭 가이드 고정
기기와 함께 제공된 핀으로 용지폭 가이드를 고정시킬 수 있습니다.
필요하면 아래의 작업을 하십시오.

JP

用紙幅ガイドの固定
用紙幅ガイドは同梱のピンで固定することが可能です。
必要に応じて、以下の作業を行って下さい。

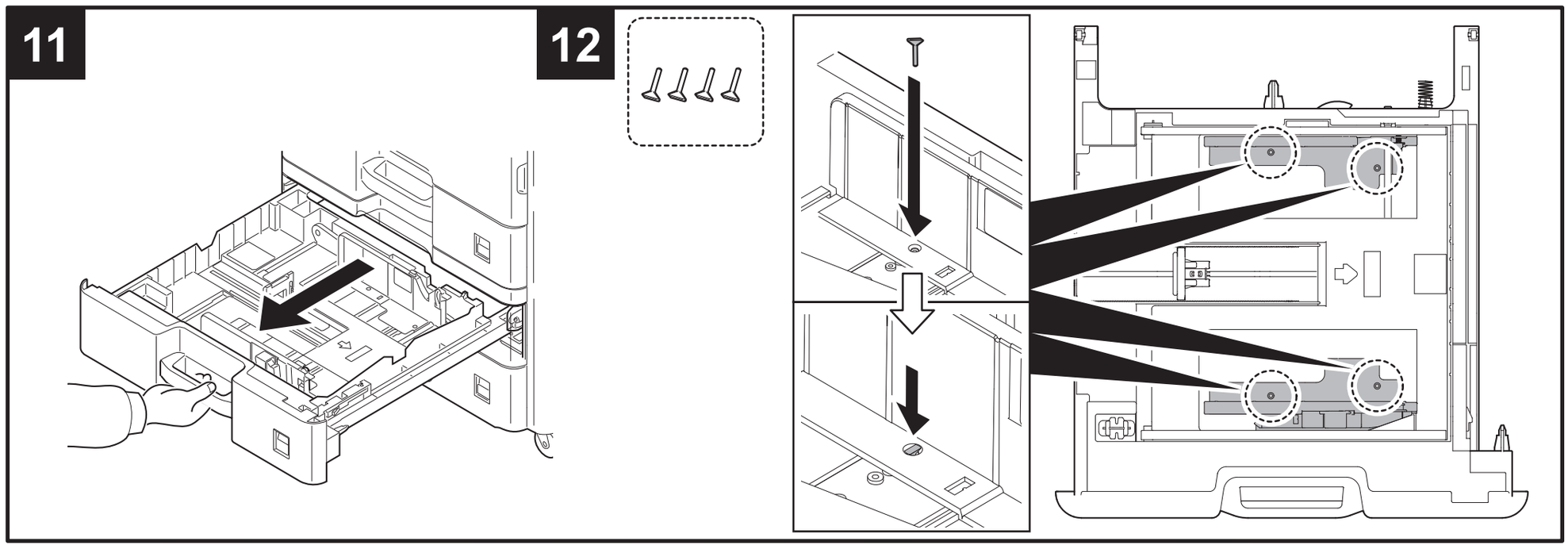

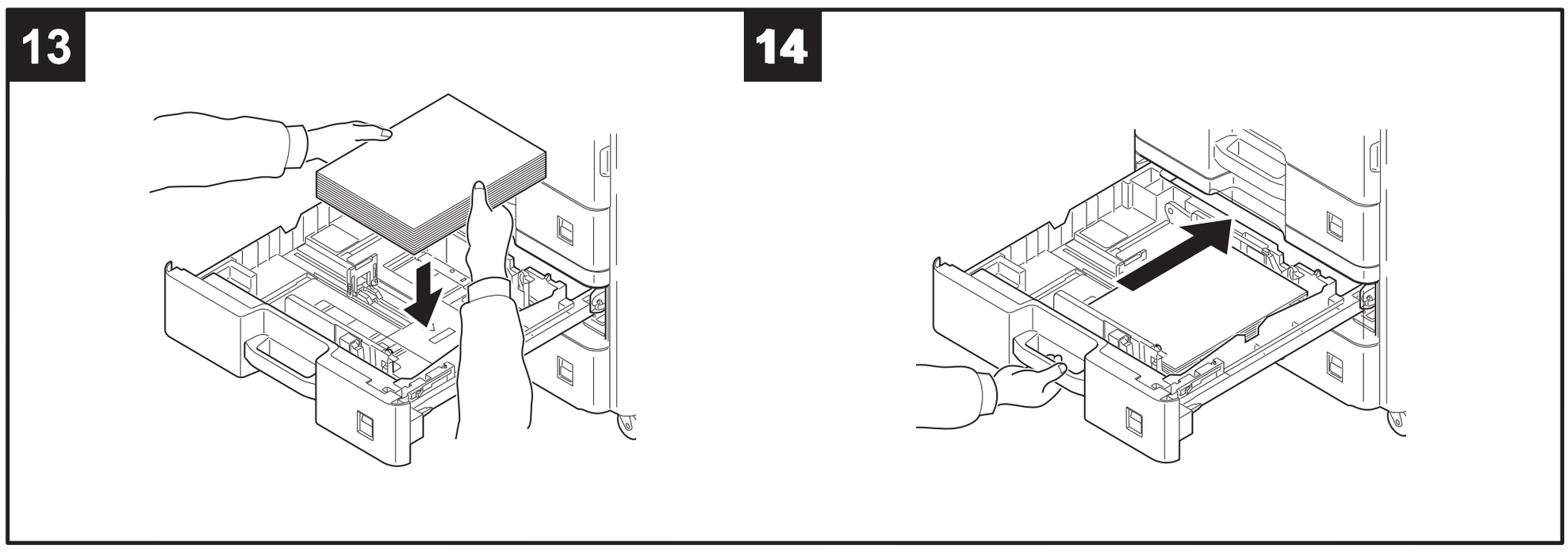

2010.9
303NN56710

Document finisher Installation Guide

DF-470 DOCUMENT FINISHER , AK-470 ATTACHMENT KIT

for

Black & White MFP 25/30

Color MFP 20/25

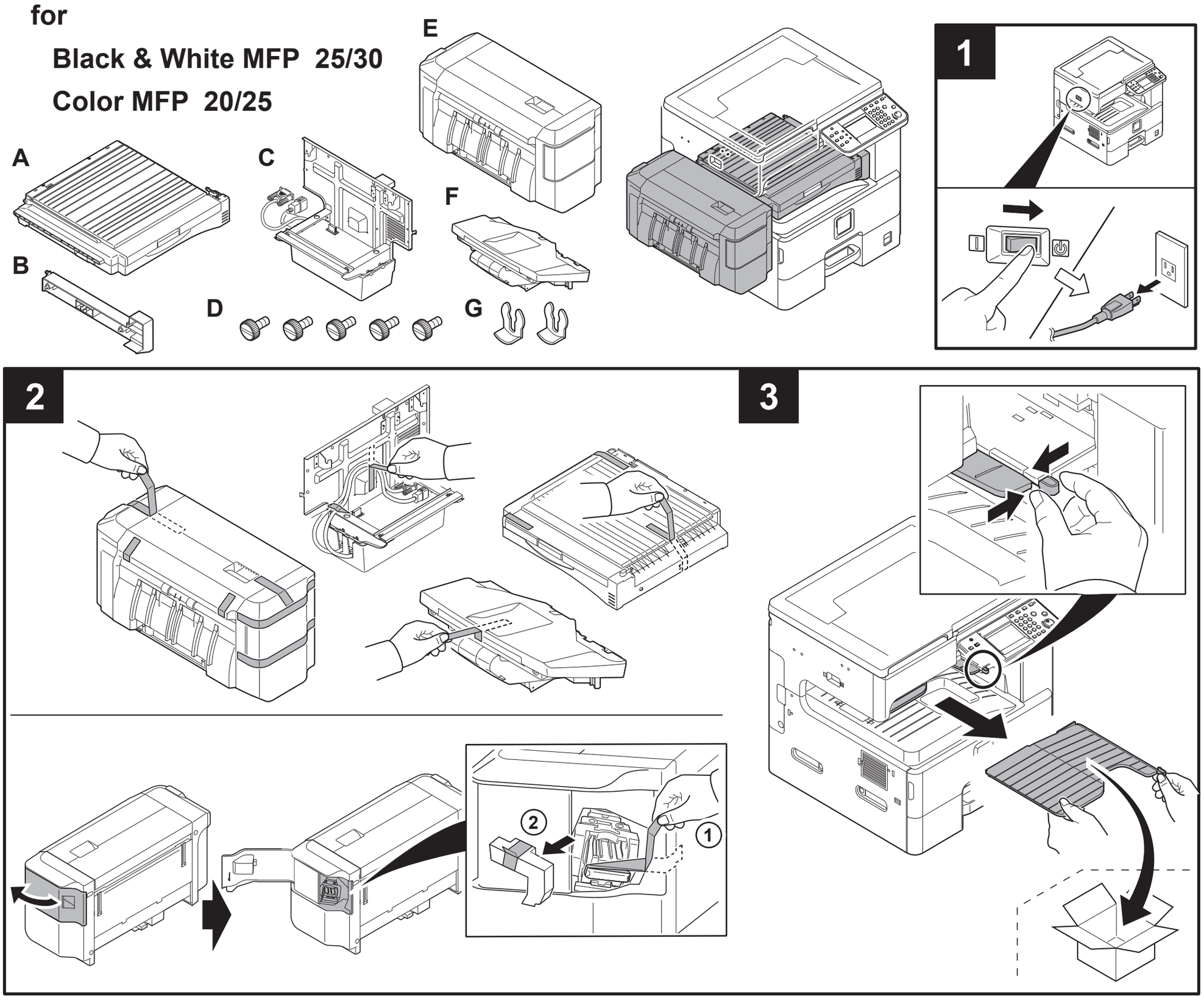

4 Black & White MFP 25/30

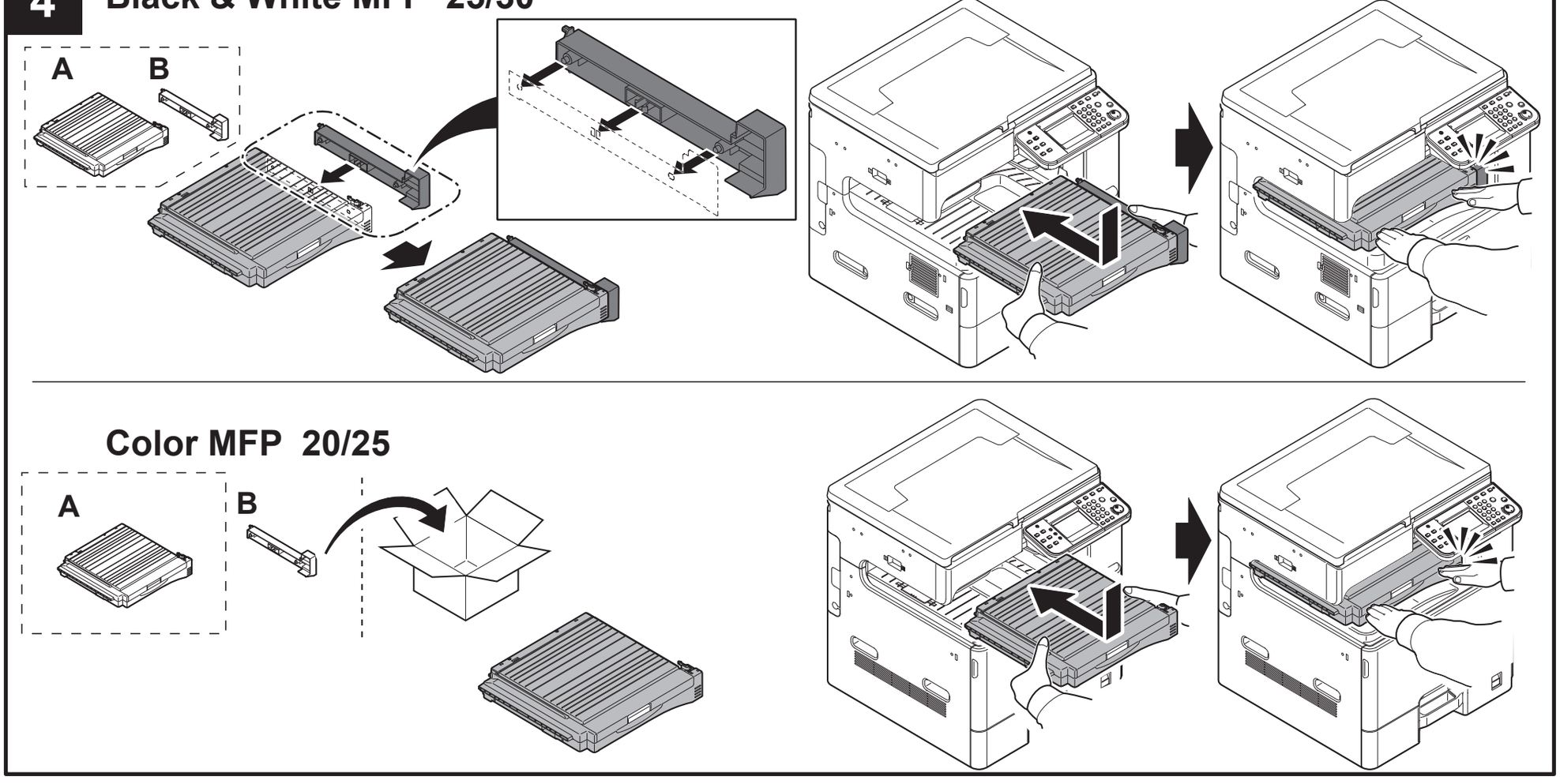

2010.9
305JS56710

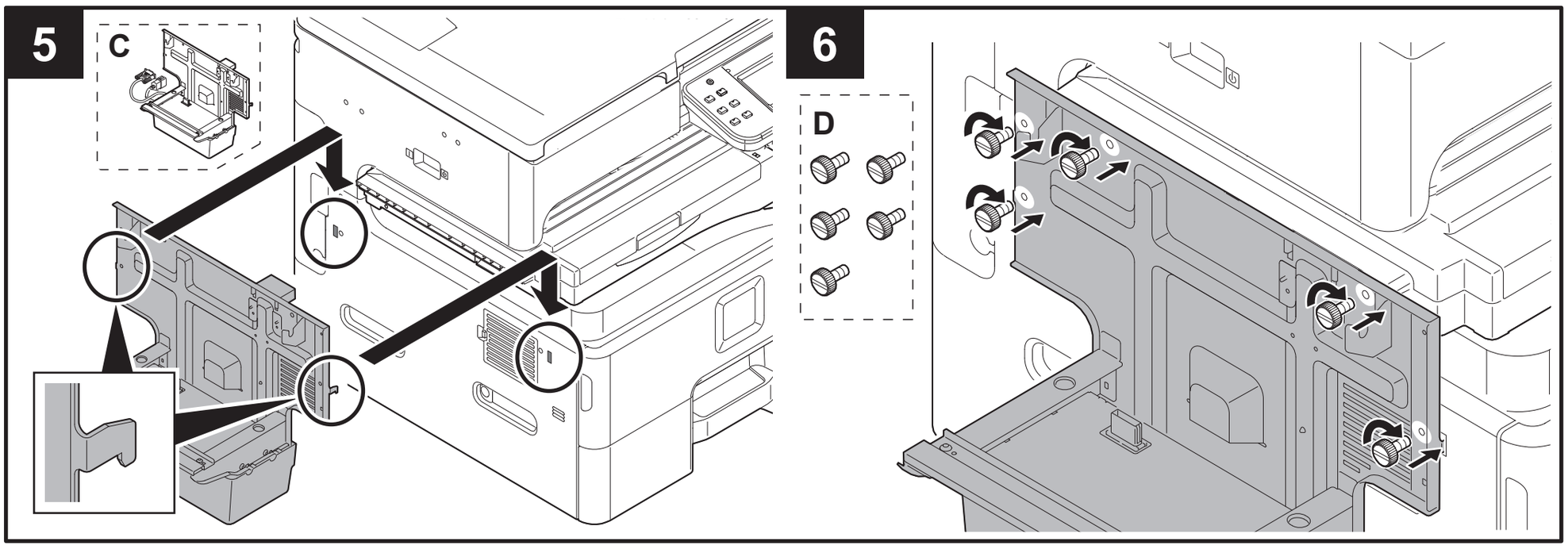

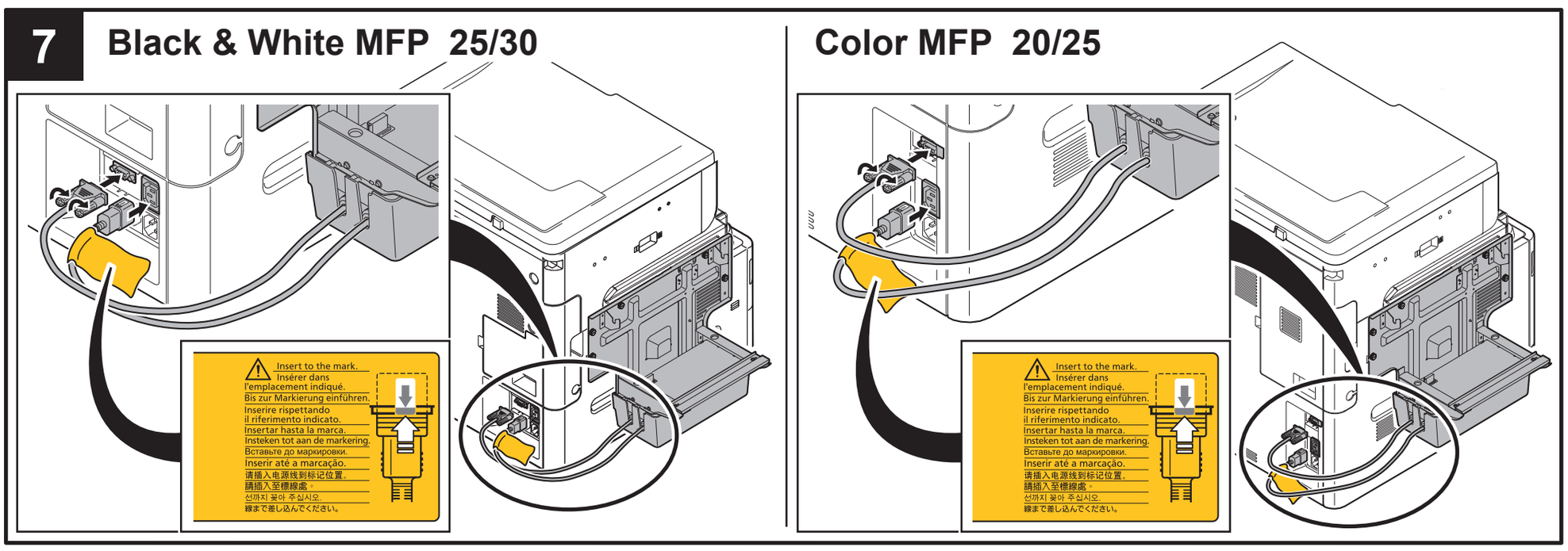

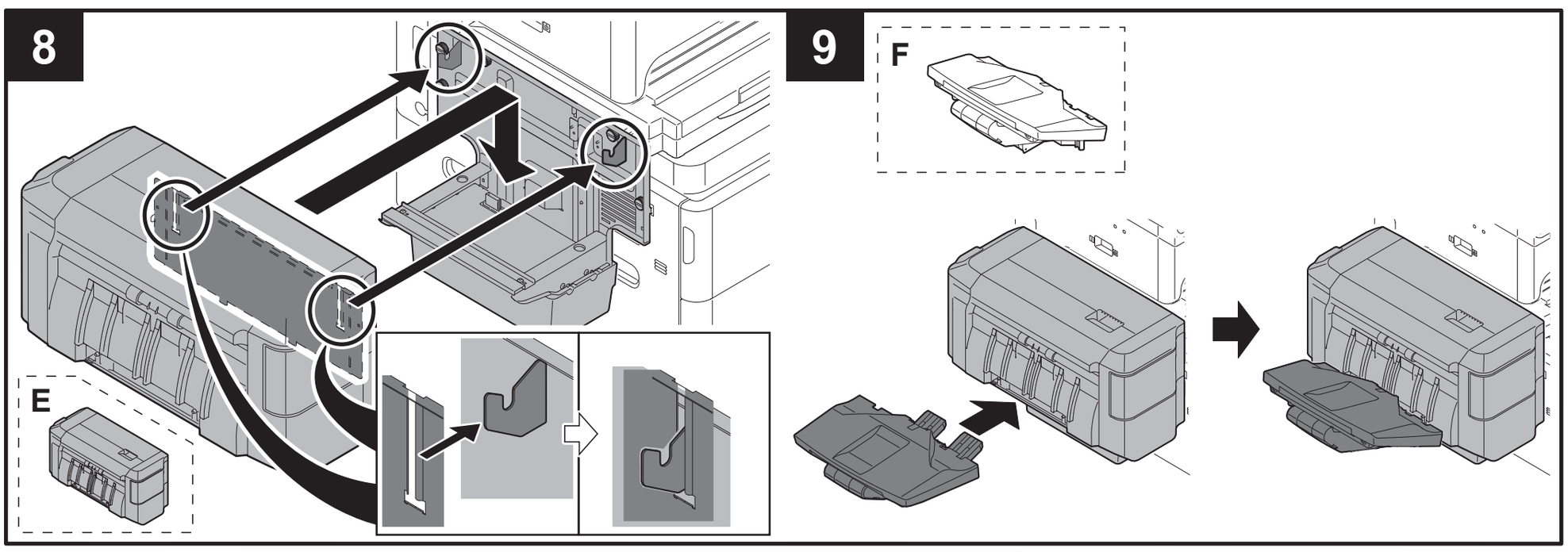

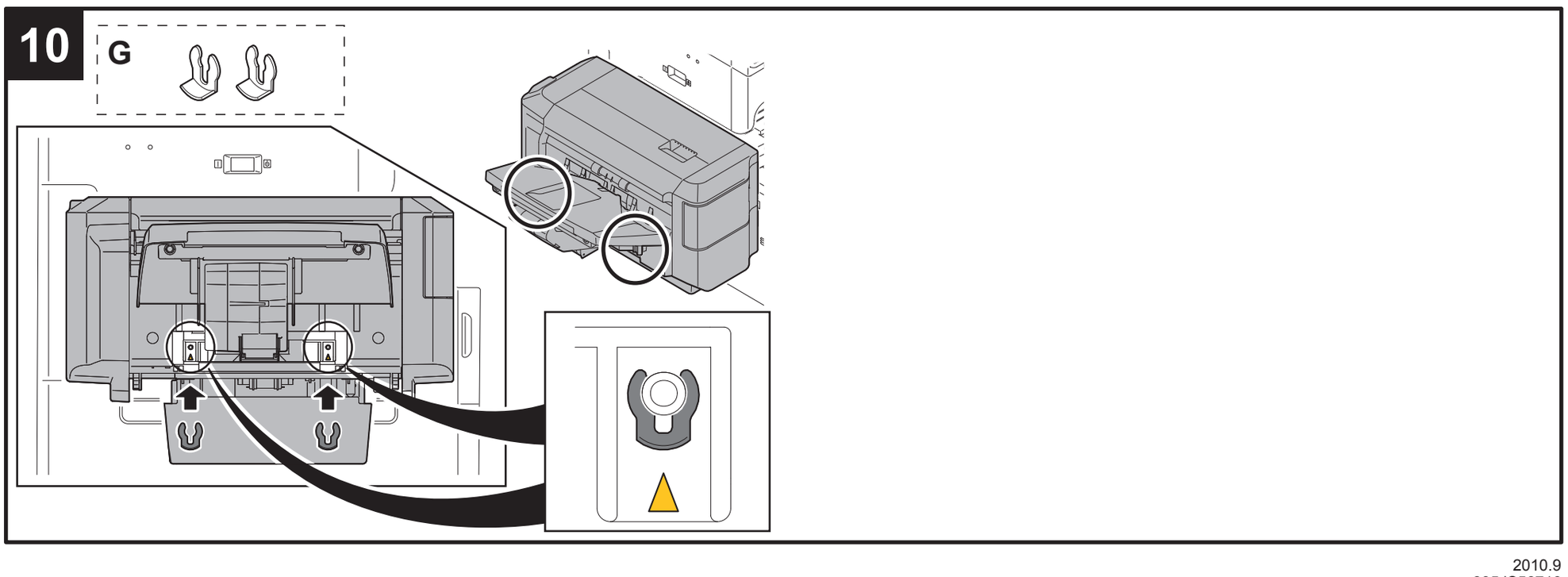

2010.9
305JS56710

FAX System(U)
Installation Guide

FAX System(U)

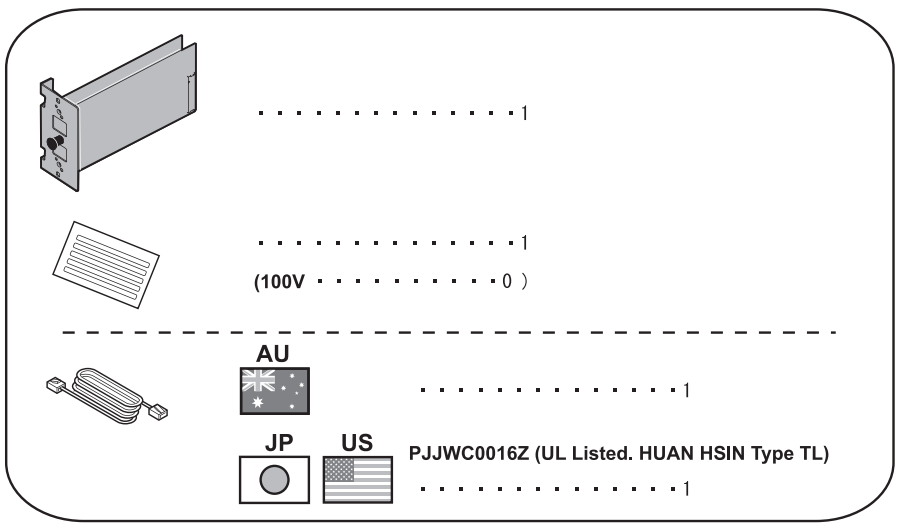

Black & White MFP 25/30

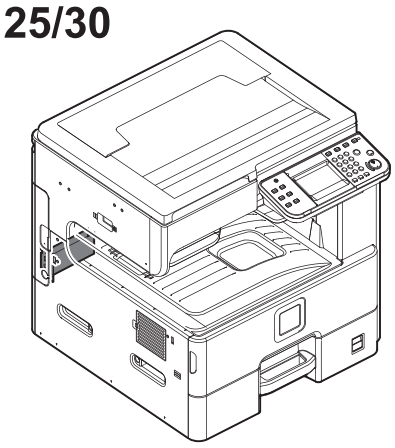

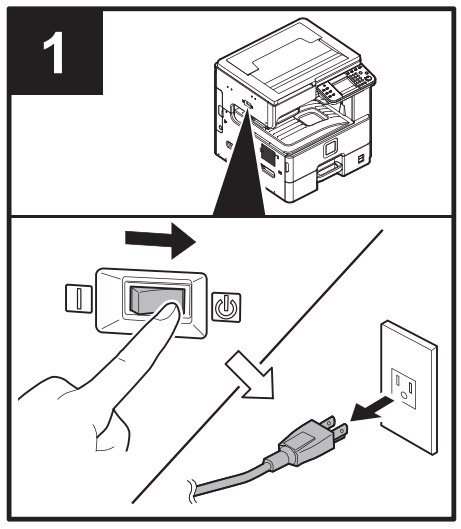

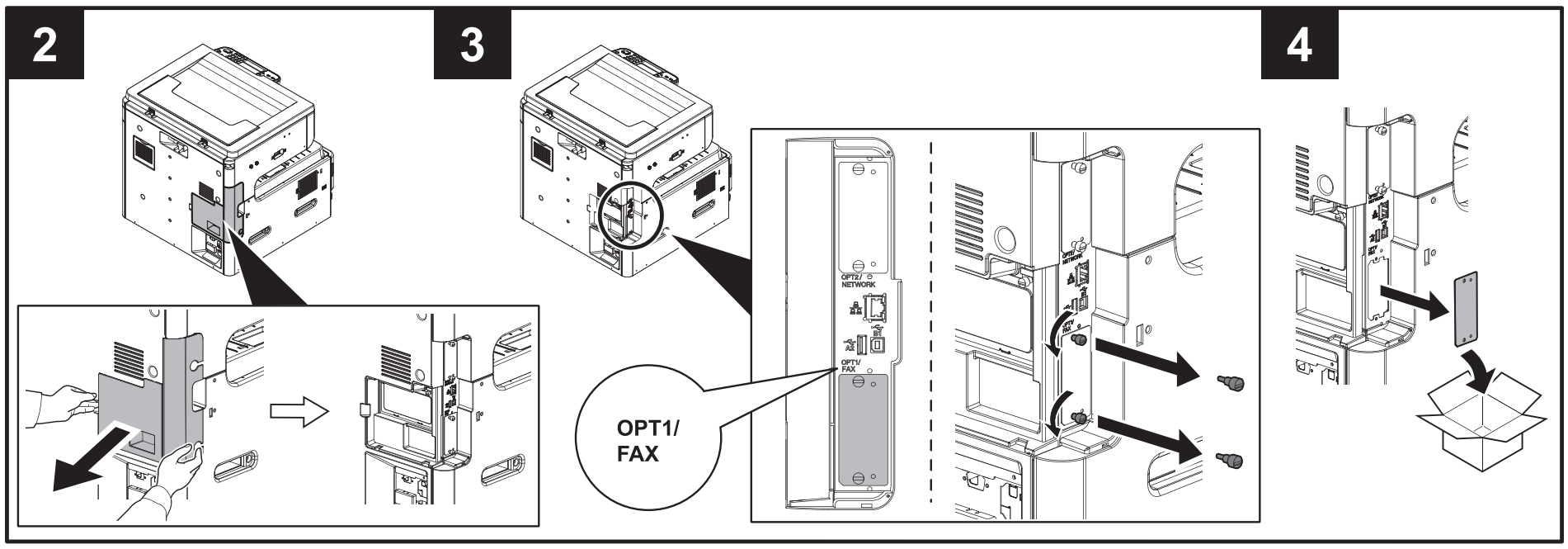

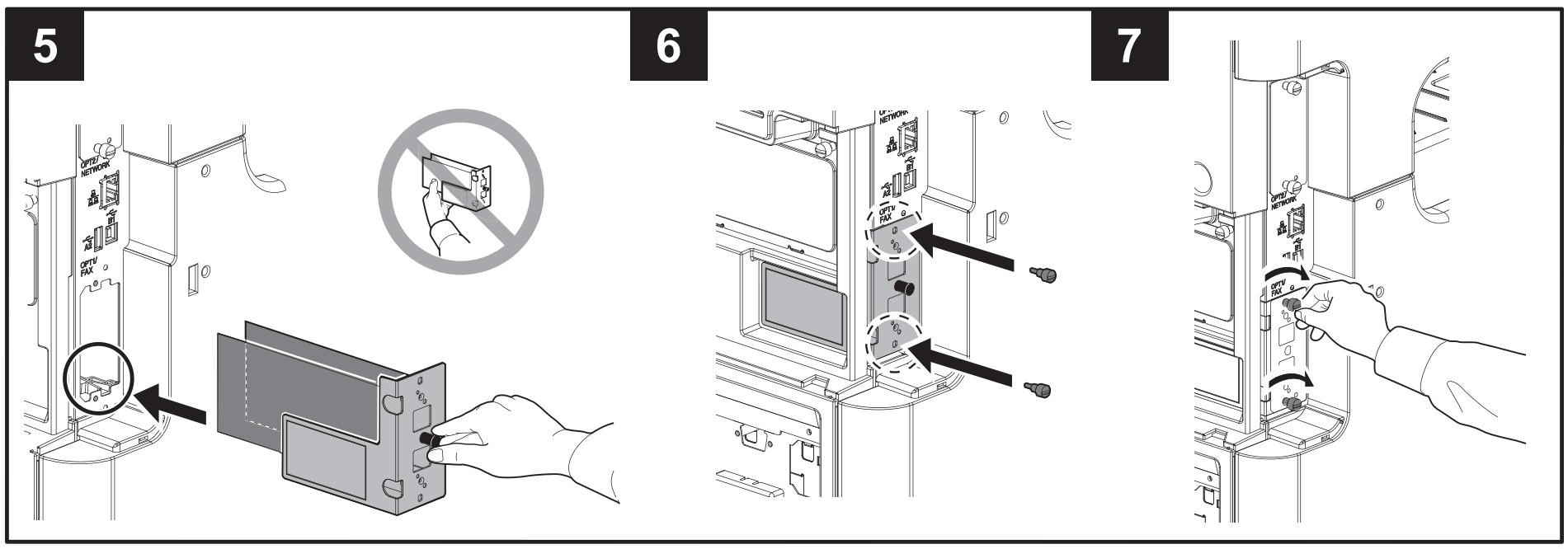

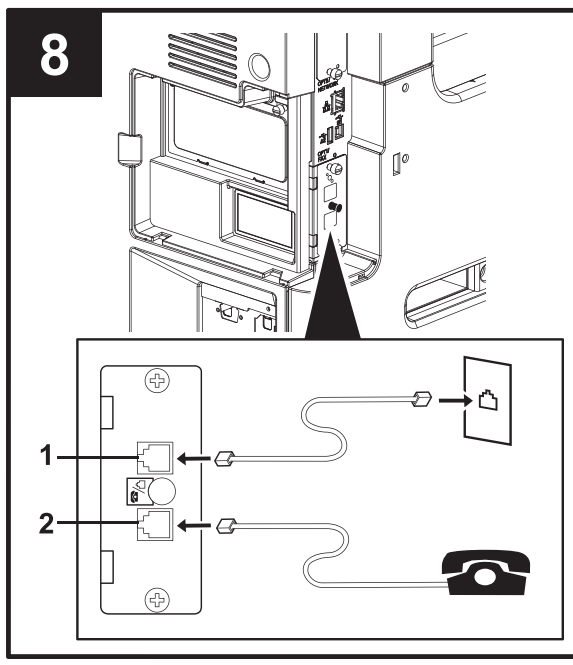

1	LINE connector	Connect the modular cord for the telephone line to this connector.
2	TEL connector	When using a commercially available telephone set, connect the modular cord to this connector.

1	Connecteur LINE	Brancher le cordon pour la ligne téléphonique sur cette prise.
2	Connecteur TEL	Lors de l'utilisation d'un téléphone standard, brancher le cordon téléphonique à cette prise.

1	Conector de LÍNEA	Conecte el cable modular de la línea telefónica a este conector.
2	Conector TEL	Si utiliza un aparato telefónico de los disponibles en el mercado, conecte el cable modular a este conector.

1	Leitungs-anschluss-buchse	Verbinden Sie diesen Anschluss mit der Telefondose.
2	Telefonan-schlussbuchse	Hier kann ein Telefon angeschlossen werden.

1	Connettore LINEA	Collegare a questo connettore il cavo modulare della linea telefonica.
2	Connettore TEL	Se si desidera collegare al sistema un normale telefono, collegarlo a questo connettore.

1	LINHA conector	Conecte o cabo modular para a linha telefônica a este conector.
2	TEL conector	Ao usar um aparelho telefônico disponível comercialmente, conecte o cabo modular a este conector.

1	LINE接続コネクター	電話回線のモジュラーコードを接続してください。
2	TEL接続コネクター	市販の電話機を併用する場合は、ここに接続してください。

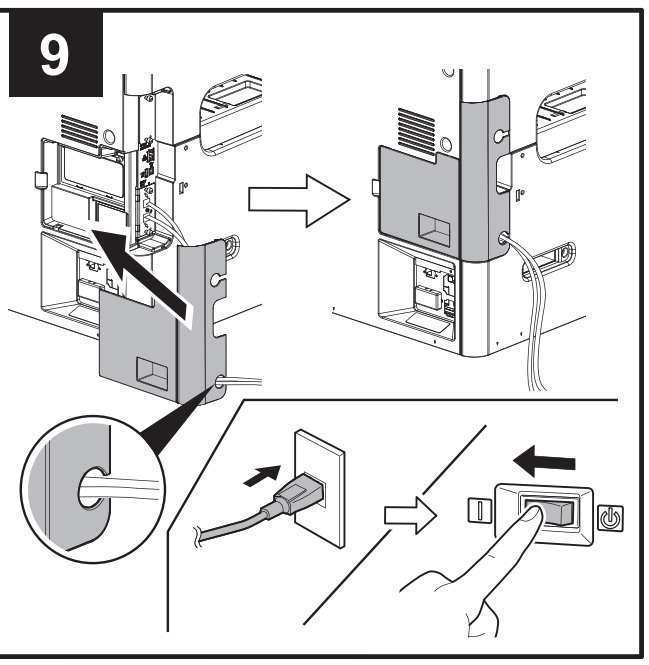

2010.9
305JR56710

FAX Setup Wizard

ENG

The machine provides Quick Setup Wizard in System Menu to set the FAX. Follow the instructions on the operation panel.

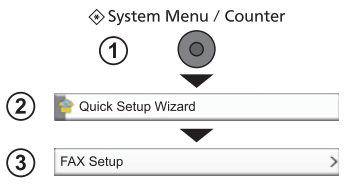

BR

A máquina fornece o Assistente de Configuração Rápida no Menu de Sistema para configurar o FAX. Siga as instruções no painel de operação.

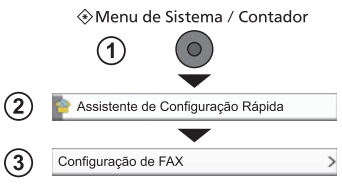

CZ

V systémové nabídce zařízení najdete Průvodce rychlým nastavením, pomocí něhož můžete nastavit FAX. Postupujte podle pokynů na provozním panelu.

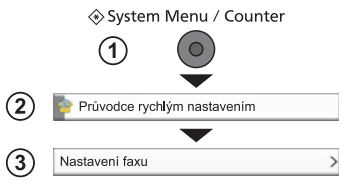

DE

Die Maschine bietet den Schnelleinstieg Wizard im Systemmenü an, um das Fax einzustellen: Folgen Sie den Anweisungen auf dem Bedienfeld.

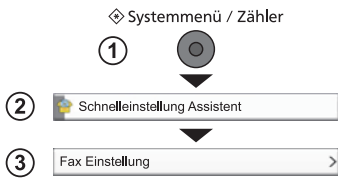

DK

Maskinen indeholder en Guide til hurtig opsætning i System menuen til indstilling af faxen. Følg anvisningerne på betjeningspanelet.

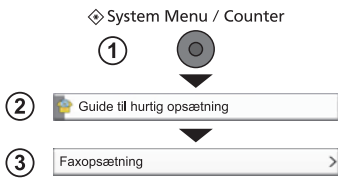

ES

La máquina dispone del Asistente de configuración rápida en el Menú Sistema para configurar el fax. Siga las instrucciones del panel de controles.

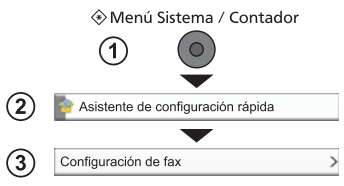

FI

Laitteen Järjestelmä-valikossa on ohjattu pika-asennustoiminto faksin asetusta varten. Noudata käyttöpaneelin ohjeita.

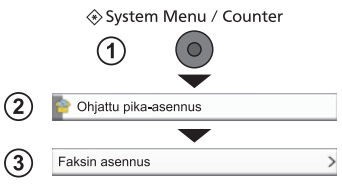

FR

L'appareil prévoit un Assistant de configuration rapide dans le menu système pour régler les paramètres du fax. Suivez les instructions sur le panneau de commande.

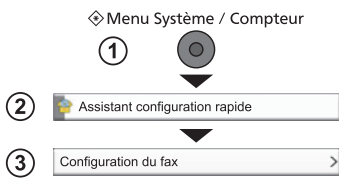

GR

Το μηχάνημα διαθέτει έναν Οδηγό Γρήγορης Εγκατάστασης στο Μενού Συστήματος για τη ρύθμιση του ΦΑΞ. Ακολουθήστε τις οδηγίες που εμφανίζονται στον πίνακα λειτουργίας.

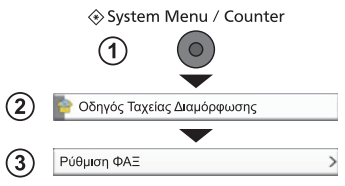

HEB

המכשיר מספק אשף הגדרה מהירה בתפריט המערכת, להגדרת הפקס.
פעל לפי ההוראות המופיעות בלוח המפעיל.

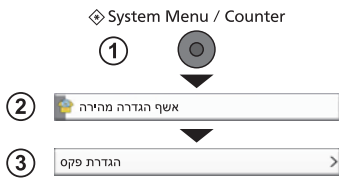

HU

A rendszermenüben a gyorstelepítő varázsló lehetővé teszi a FAX beállítását. Kövesse a kezelőpulton megjelenő utasításokat.

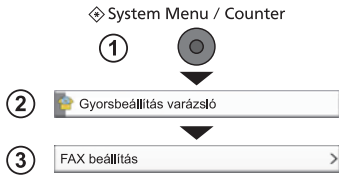

IT

È possibile utilizzare la procedura guidata di installazione rapida reperibile nel Menu Sistema per la configurazione del modulo FAX. Attenersi alle istruzioni visualizzate sul pannello comandi.

NL

In het Systeemmenu van het apparaat bevindt zich de wizard Snel installeren om de fax in te stellen. Volg de instructies op het bedieningspaneel van de fax.

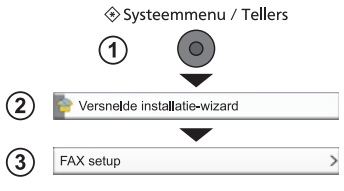

NO

Maskinen har en Hurtigoppsettveiviser i Systemmenyen til innstilling av faksen. Følg veiledningen på betjeningspanelet.

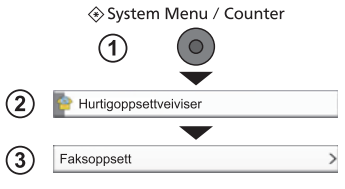

PL

W menu systemowym urządzenia dostępny jest Przewodnik szybkiej instalacj, który pozwoli ustawić funkcję FAKSU. Wykonuj instrukcje z panelu operacyjnego.

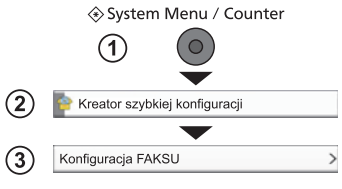

PT

A máquina proporciona o Assistente de Configuração Rápida no Menu do Sistema para definir o FAX. Siga as instruções no painel de funcionamento.

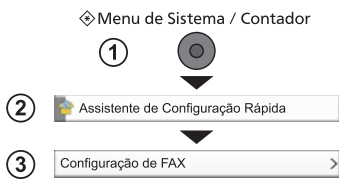

RO

Echipamentul are un expert de configurare rapidă în meniul Sistem pentru configurarea faxului.Urmați instrucțiunile din panoul de utilizare.

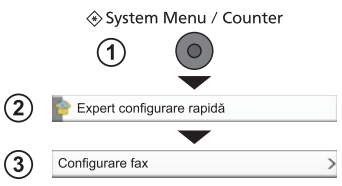

RU

Аппарат позволяет запустить мастер быстрой установки из системного меню для настройки факса. Выполните инструкции на панели управления.

SV

Maskinen har en snabbstartguide i systemmenyn för att ställa in faxen: Följ instruktionerna som anges på kontrollpanelen.

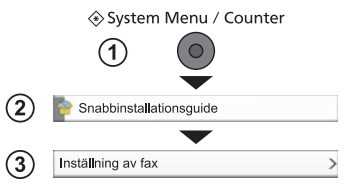

TR

Cihaz FAKS ayarlamak için Sistem Menüsünde Hızlı Kurulum Sihirbazı sunar. İşletim panosundaki talimatları izleyin.

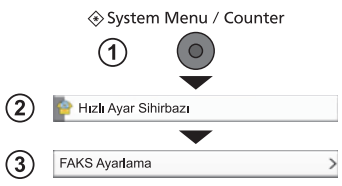

ARA

يوفر الجهاز معالج الإعداد السريع في قائمة النظام لإعداد الفاكس.
اتبع التعليمات الموجودة على لوحة التشغيل.

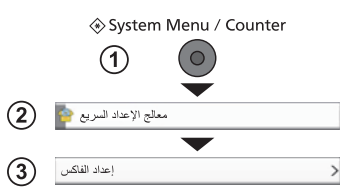

CN

可通过机器系统菜单中的快速设置向导设置传真。请遵循操作面板上的指导说明。

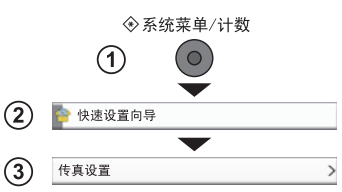

TW

可透過系統選單中的快速設定精靈進行傳真設定。請依照操作面板上的指示說明。

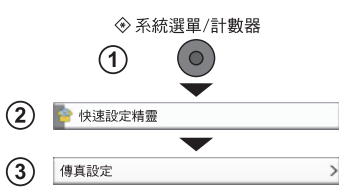

KO

기기의 시스템 메뉴에서 팩스를 설정할 수 있도록 빠른 설정 마법사를 제공합니다.조작 패널에 표시된 지침을 따르십시오.

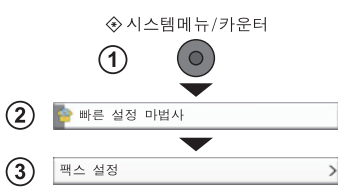

JP

本機は、システムメニューに簡単セットアップウィザードを搭載しております。画面にしたがってファクスを設定してください。

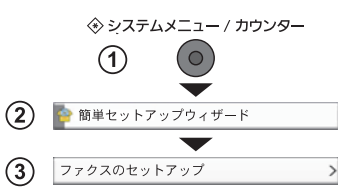

2010.9
305JR56710

KYOCERA MITA EUROPE B.V.

Bloemlaan 4, 2132 NP Hoofddorp,
The Netherlands
Phone: +31.20.654.0000
Home page: http://www.kyoceramita-europe.com
Email: info@kyoceramita-europe.com

KYOCERA MITA NEDERLAND B.V.
Beechavenue 25, 1119 RA Schiphol-Rijk
The Netherlands
Phone: +31.20.58.77.200

KYOCERA MITA (UK) LTD
8 Beacontree Plaza
Gillette Way Reading Berks RG2 0BS,
U.K.
Phone: +44.1189.311.500

KYOCERA MITA ITALIA S.p.A.
Via G. Verdi, 89 / 91, 20063 Cernusco s/N
Milano, Italy
Phone: +39.02.92179.1

S.A. KYOCERA MITA BELGIUM N.V.
Sint-Martinusweg 199-201, 1930 Zaventem,
Belgium
Phone: +32.2.720.9270

KYOCERA MITA FRANCE S.A.
Espace Technologique de St Aubin
Route de l' Orme
91195 Gif-sur-Yvette CEDEX, France
Phone: +33.1.6985.2600

KYOCERA MITA ESPAÑA S.A.
Edificio Kyocera, Avda de Manacor No. 2,
28290 Las Matas (Madrid),
Spain
Phone: +34.91.631.8392

KYOCERA MITA FINLAND OY
Atomitie 5C, 00370 Helsinki,
Finland
Phone: +358.9.4780.5200

KYOCERA MITA (SCHWEIZ)
Hohlstrasse 614, 8048 Zürich
Switzerland
Phone: +41.44.908.4949

KYOCERA MITA DEUTSCHLAND GMBH
Otto-Hahn-Str. 12 D-40670 Meerbusch,
Germany
Phone: +49.2159.918.0

KYOCERA MITA GMBH AUSTRIA
Eduard-Kittenberger-Gasse 95,
1230 Wien,
Austria
Phone: +43.1.86338

KYOCERA MITA SVENSKA AB
Esbogatan 16B 164 75 Kista,
Sweden
Phone: +46.8.546.55000

KYOCERA MITA NORGE
Postboks 150 Oppsal, NO 0619 Oslo
Olaf Helsetsvei 6, NO 0694 Oslo,
Norway
Phone: +47.22.62.73.00

KYOCERA MITA DANMARK A/S
Ejby Industrivej 60, DK-2600 Glostrup,
Denmark
Phone: +45.7022.3880

KYOCERA MITA PORTUGAL LDA.
Rua do Centro Cultural, 41 (Alvalade) 1700-106 Lisboa,
Portugal
Phone: +351.21.843.6780

KYOCERA MITA SOUTH AFRICA (PTY) LTD.
49 Kyalami Boulevard,
Kyalami Business Park Midrand,
South Africa
Phone: +27.(0)11.540.2600

KYOCERA MITA AMERICA, INC.

Headquarters:
225 Sand Road,
Fairfield, New Jersey 07004-0008,
U.S.A.
Phone: (973) 808-8444

KYOCERA MITA AUSTRALIA PTY. LTD.
Level 3, 6-10 Talavera Road, North Ryde,
N.S.W. 2113 Australia
Phone: (02) 9888-9999

KYOCERA MITA NEW ZEALAND LTD.
1-3 Parkhead Place, Albany
P.O. Box 302 125 NHPC, Auckland,
New Zealand
Phone: (09) 415-4517

KYOCERA MITA Asia Limited

16/F., Mita Centre,
552-566, Castle Peak Road,
Tsuen Wan, New Territories, Hong Kong
Phone: (852)-2610-2181

KYOCERA MITA Corporation

2-28, 1-chome, Tamatsukuri, Chuo-ku
Osaka 540-8585, Japan
Phone: (06) 6764-3555
http://www.kyoceramita.com

KYOCERA MITA AMERICA, INC.

Headquarters:
225 Sand Road,
Fairfield, New Jersey 07004-0008
TEL : (973) 808-8444
FAX : (973) 882-6000

New York Branch:
30-30 47th Avenue
Long Island City, NY 11101
TEL : (718) 289-2500
FAX : (718) 289-2501

Northeastern Region:
225 Sand Road,
Fairfield, New Jersey 07004-0008
TEL : (973) 808-8444
FAX : (973) 882-4401

Midwestern Region:
201 Hansen Court Suite 119
Wood Dale, Illinois 60191
TEL : (630) 238-9982
FAX : (630) 238-9487

Western Region:
14101 Alton Parkway,
Irvine, California 92618-7006
TEL : (949) 457-9000
FAX : (949) 457-9119

Southeastern Region:
3100 Breckinridge Blvd. NW Building 100,
Suite 105 Duluth, Georgia 30096
TEL : (770) 729-9786
FAX : (770) 729-9873

Southwestern Region:
2825 West Story Road,
Irving, Texas 75038-5299
TEL : (972) 550-8987
FAX : (972) 570-4704

National Operation Center
& National Training Center:
2825 West Story Road,
Irving, Texas 75038-5299
TEL : (972) 659-0055
FAX : (972) 570-5816

Latin America Division:
8240 N.W. 52nd. Terrace Dawson Building,
Suite 108 Miami, Florida 33166
TEL : (305) 421-6640
FAX : (305) 421-6666

KYOCERA MITA CANADA, LTD.

6120 Kestrel Road, Mississauga,
Ontario L5T 1S8, Canada
TEL : (905) 670-4425
FAX : (905) 670-8116

KYOCERA MITA MEXICO, S.A. DE C.V.

Av. 16 de Septiembre #407
Col. Santa Inés,
Azcapotzalco México,
D.F. 02130, México
TEL : (55) 5383-2741
FAX : (55) 5383-7804

KYOCERA MITA Brazil Ltda.

Av. Tambore, 1180 Mob.B-09 CEP 06460-000
Tambore-Barveri-SP,
Brazil
TEL : (55) 11-4195-8496
FAX : (55) 11-4195-6167

KYOCERA MITA Asia Limited

16/F., Mita Centre,
552-566, Castle Peak Road,
Tsuen Wan, New Territories, Hong Kong
Phone: (852)-2610-2181

KYOCERA MITA (Thailand) Corp., Ltd.
335 Ratchadapisek Road, Bangsue,
Bangkok, 10800, Thailand
Phone: (66)-2-586-0333

KYOCERA MITA Singapore Pte Ltd.
121 Genting Lane, 3rd Level,
Singapore 349572
Phone: (65)-6741-8733

KYOCERA MITA Hong Kong Limited
16/F., Mita Centre,
552-566, Castle Peak Road,
Tsuen Wan, New Territories,
Hong Kong
Phone: (852)-2429-7422

KYOCERA MITA Taiwan Corporation
6F., No.37, Sec. 3, Minquan E. Rd.,
Zhongshan Dist., Taipei 104, Taiwan R.O.C.
Phone: (886)-2-2507-6709

KYOCERA MITA Korea Co., Ltd.
18F, Kangnam bldg, 1321-1,
Seocho-Dong, Seocho-Gu, Seoul, Korea
Phone: (822)-6933-4050

KYOCERA MITA India Private Limited
First Floor, ORCHID CENTRE
Sector-53, Golf Course Road, Gurgaon 122
002, India
Phone: (91)-0124-4671000